MCM AUDIO SELECT™

www.mcmelectronics.com

Model Number:	**53-1245**
1.75“ Titainium Dome Horn Tweeter	
Frequency Response: 500Hz ~ 20KHz	
24oz Magnet Structure	
1.75" High Temperature Voice Coil	
SPL:103dB@1W/1M	
300 Watts Rated Power	

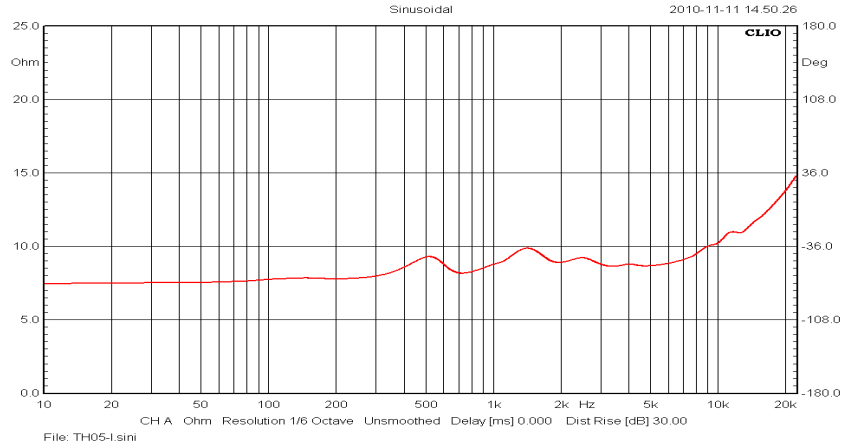

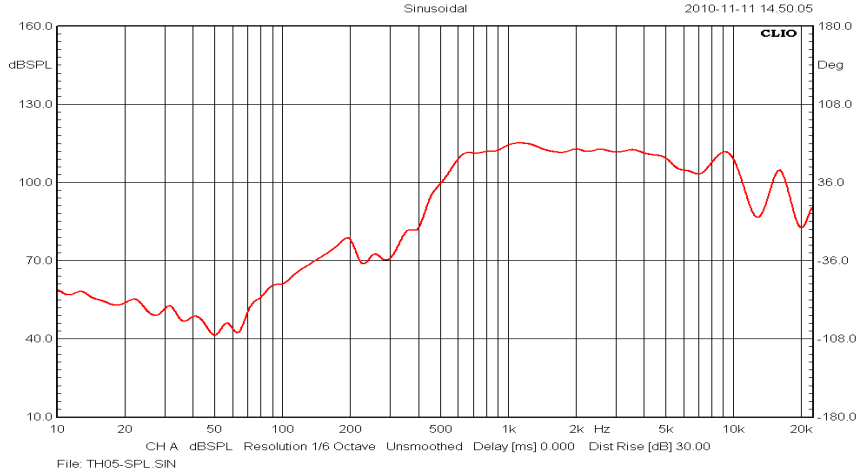

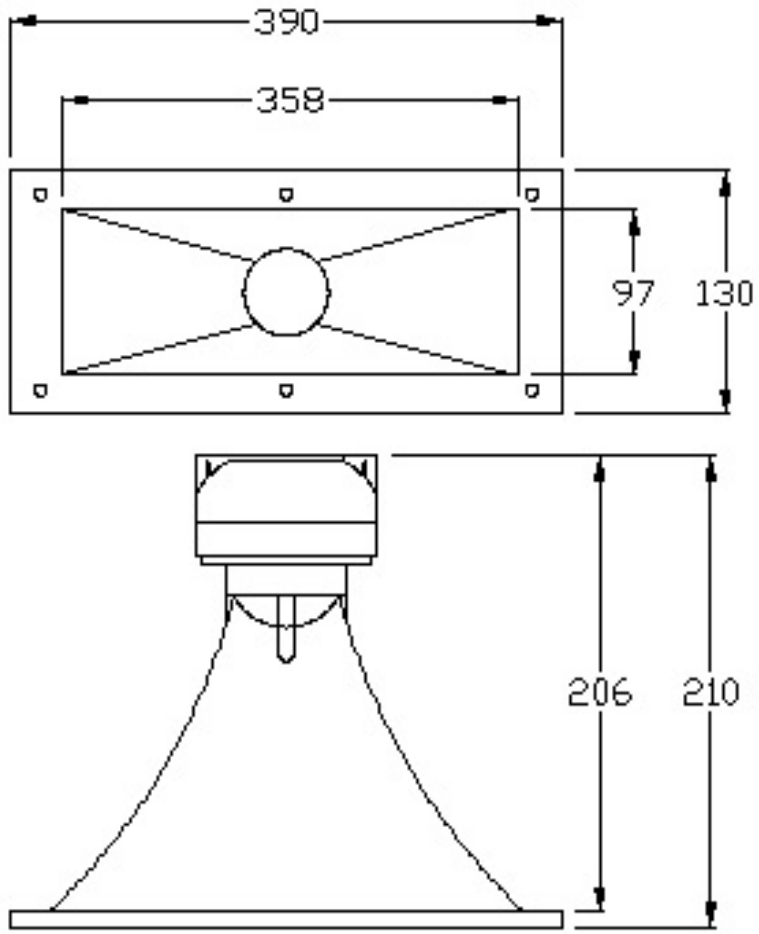

ALL DIMENSIONS ARE IN MILLIMETERS