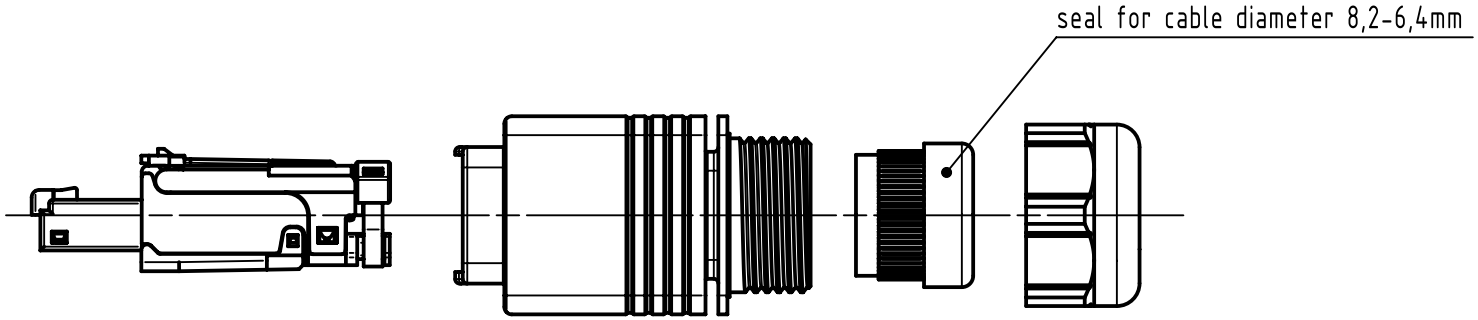

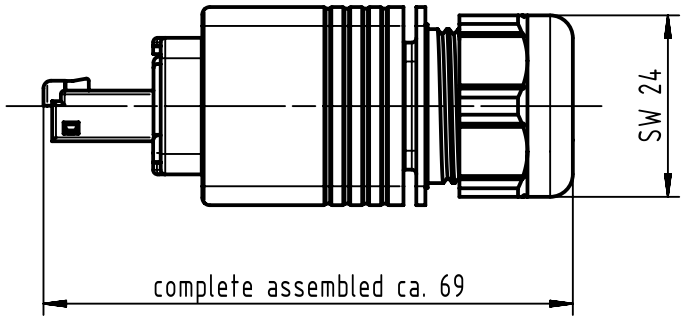

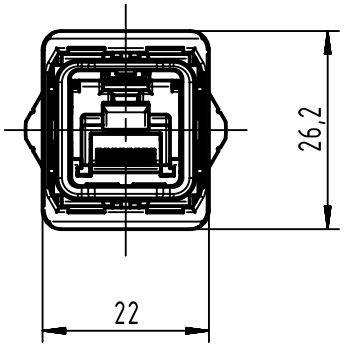

further information see: DS 20820000000

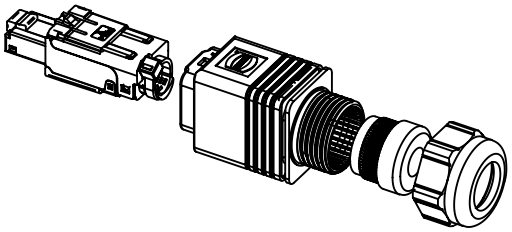

All Dimensions in mm Original Size DIN A4	Scale 1:1	Free size tol.		Ref. Sub.	
All rights reserved Department EC PD - DE	Created by ELLERMANN	Inspected by KOHLER	Standardisation HOFFMANN	Date 2014-09-19	State Final Release
HARTING Electronics GmbH D-32339 Espelkamp	Title Han PP V14 preLink RJ45 plug 8p plastic				Doc-Key / ECM-Nr. 100572599/UGD/000/A 500000079382
	Type TB	Number 20822040001		Rev. A	Page 1/1

A4