Feb.1.2017 Copyright 2017 HIROSE ELECTRIC CO., LTD. All Rights Reserved.

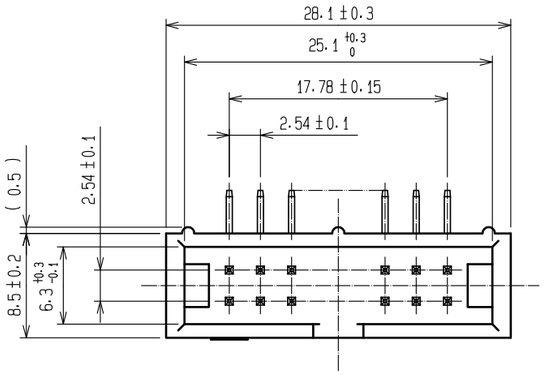


RECOMMENDED PC BOARD HOLE PATTERN

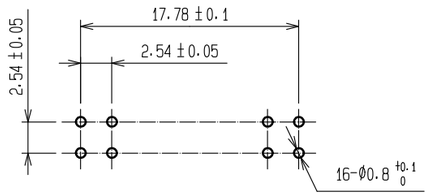


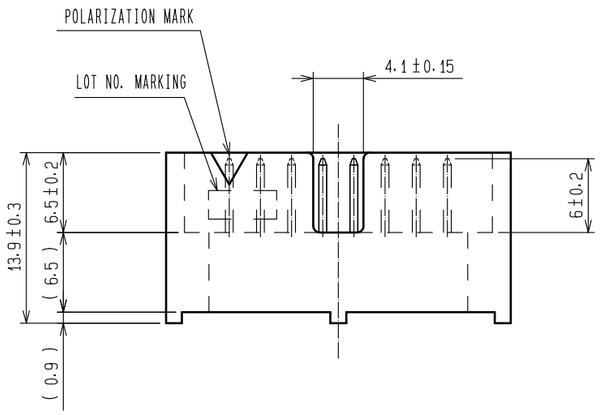


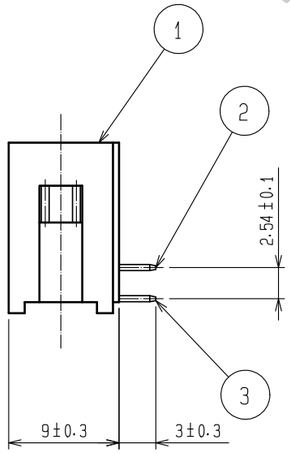


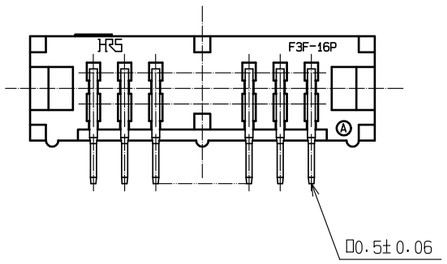


HRS DRAWING FOR REFERENCE

NOTE 1. THE DIMENSIONS IN PARENTHESES ARE FOR REFERENCE.

| NO. | MATERIAL | FINISH , REMARKS | NO. | MATERIAL | FINISH , REMARKS |
|---|---|---|---|---|---|
| 1 | PBT | BLACK UL94V-0 | 2 、 3 | BRASS | CONTACT AREA:GOLD 0.2μm min.<br>LEAD AREA:TIN-PLATING 2μm min.<br>UNDER PLATING:NICKEL 2.5μm min. |

| UNITS | SCALE | COUNT | DESCRIPTION OF REVISIONS | DESIGNED | CHECKED | DATE |
|---|---|---|---|---|---|---|
| mm | 2 : 1 | 0 | | | | |

HRS HIROSE ELECTRIC CO., LTD.

| | | | | |
|---|---|---|---|---|
| APPROVED | : HS. OKAWA | 15. 07. 29 | DRAWING NO. | EDC-016846-71-00 |
| CHECKED | : HT. YAMAGUCHI | 15. 07. 29 | PART NO. | HIF3F-16PA-2.54DS(71) |
| DESIGNED | : TH. SANO | 15. 07. 28 | CODE NO. | CL615-0042-9-71 |
| DRAWN | : HR. NAGAYASU | 15. 07. 28 | | 0 1/1 |