THIS DRAWING IS UNPUBLISHED. RELEASED FOR PUBLICATION 20
© COPYRIGHT 20 - ALL RIGHTS RESERVED.

REVISIONS

P	LTR	DESCRIPTION	DATE	DWN	APVD
	C	REVISED PER ECO-16-010988	22JUL2016	JPS	JLM

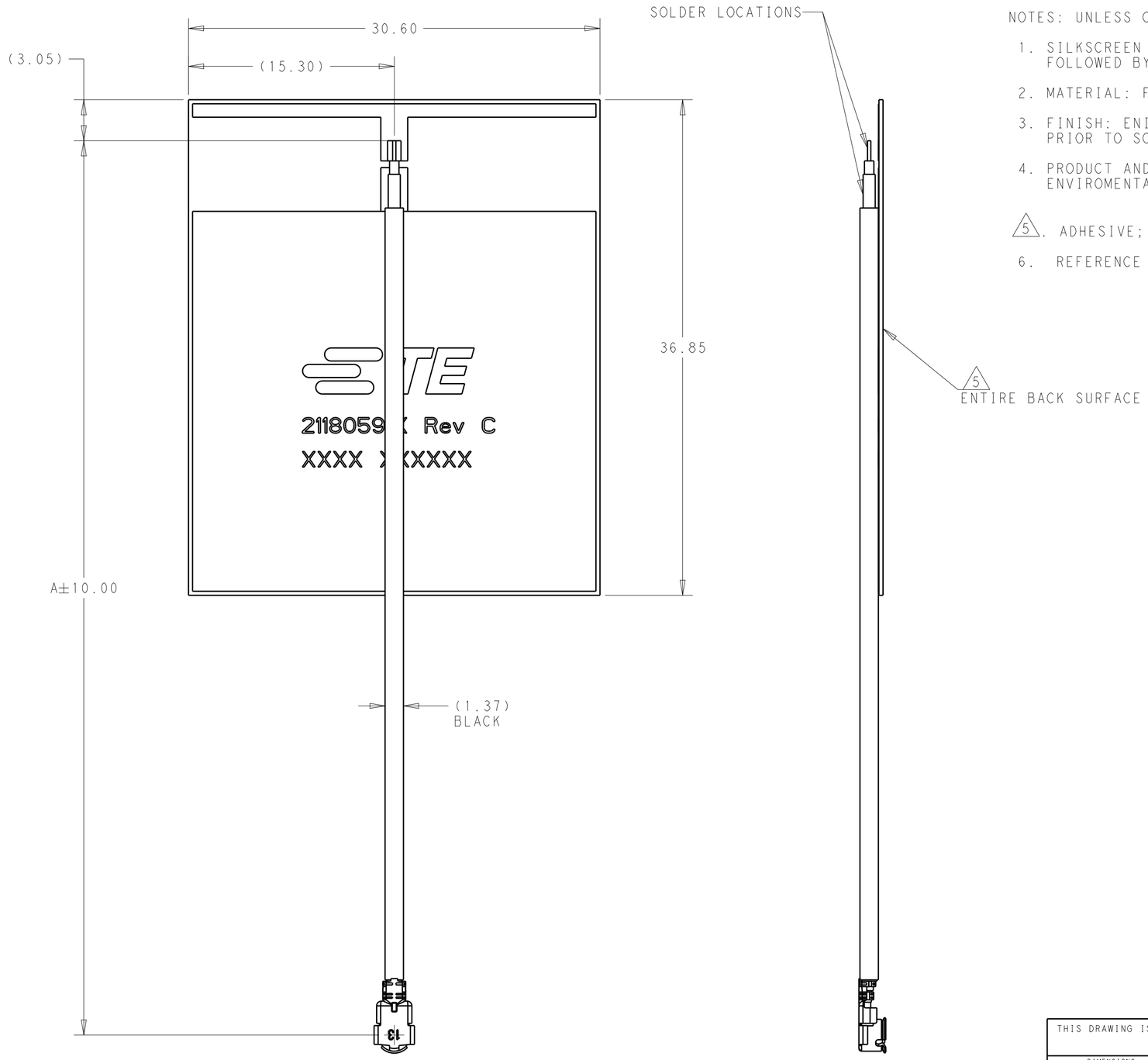

NOTES: UNLESS OTHERWISE SPECIFIED.

1. SILKSCREEN TE LOGO, TE PN, REVISION LETTER ON TOP LAYER. FOLLOWED BY 4 DIGIT DATE CODE.
2. MATERIAL: FR4, COPPER THICKNESS 1 OZ, TOTAL THICKNESS 0.304 WITH OUT ADHESIVE.
3. FINISH: ENIG-ELECTROLESS NICKEL IMMERSION GOLD ON EXPOSED SOLDER AREAS PRIOR TO SOLDERING.
4. PRODUCT AND PROCESSING MEETS REQUIREMENTS OF TE CONNECTIVITY ENVIROMENTAL SPECIFICATION TEC-138-702.

5. ADHESIVE; REMOVE PAPER BACKING OF PRESSURE SENSITIVE ADHESIVE TO APPLY.

6. REFERENCE TE DATASHEET DS2118059-1 FOR ANTENNA SPECIFICS.

150.00	2118059-3
NON-SALABLE	2118059-2
350.00	2118059-1
A	PN

THIS DRAWING IS A CONTROLLED DOCUMENT.

DIMENSIONS: mm

TOLERANCES UNLESS OTHERWISE SPECIFIED:
0 PLC ±-
1 PLC ±
2 PLC ±0.2
3 PLC ±
4 PLC ±
ANGLES ±-

MATERIAL -
-

FINISH -
-

DWN J. SCHOLZ 22JUL2016
CHK J. SCHOLZ 22JUL2016
APVD J. MOORE 22JUL2016

PRODUCT SPEC -
APPLICATION SPEC -
WEIGHT -

CUSTOMER DRAWING

TE Connectivity

NAME WMAX SINGLE BAND, U.FL CABLE
2300 Mhz-3800<Mhz
-

SIZE	CAGE CODE	DRAWING NO	RESTRICTED TO
A2	-	C-2118059	-

SCALE 4:1 SHEET 1 OF 1 REV C

1471-9 (3/13)