THIS DRAWING IS UNPUBLISHED. RELEASED FOR PUBLICATION
© COPYRIGHT 2018 BY - TE CONNECTIVITY ALL RIGHTS RESERVED.

REVISIONS

P	LTR	DESCRIPTION	DATE	DWN	APVD
	CG	REV PER ECO-17-014327	03OCT2017	JMS	WW
	CH	REVISED PER ECO-18-002641	22FEB2018	JMS	WW
	CJ	REVISED PER ECO-18-013531	30AUG2018	JMS	WW
	CK	REV PER ECO-19-007173	17MAY2019	RGV	WW

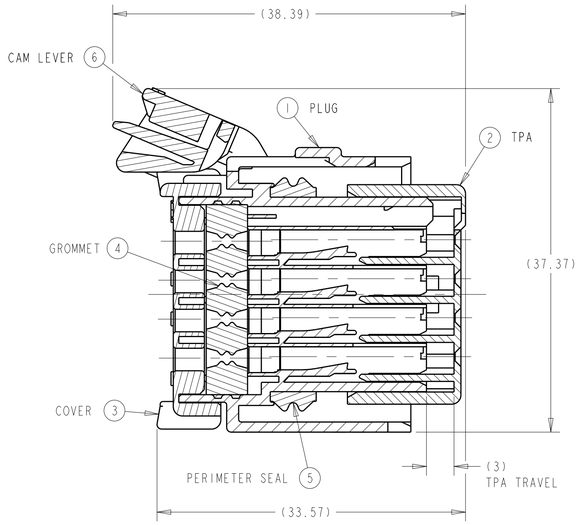

SECTION A-A
SHOWN WITH CAM LEVER
AND TPA IN THEIR
PRE-LOADED POSITIONS
(DELIVERY CONDITION)

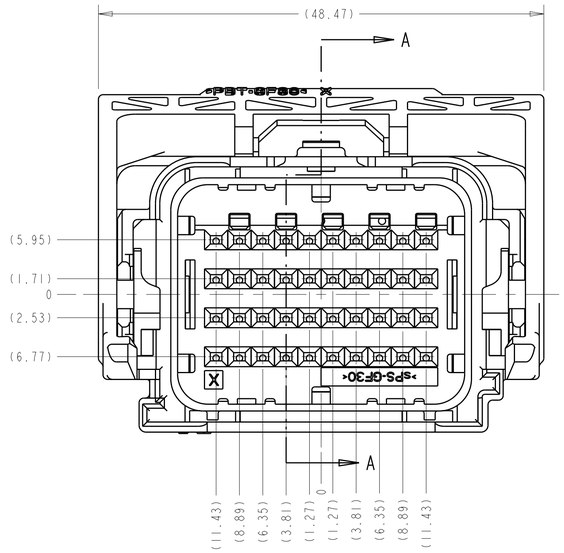

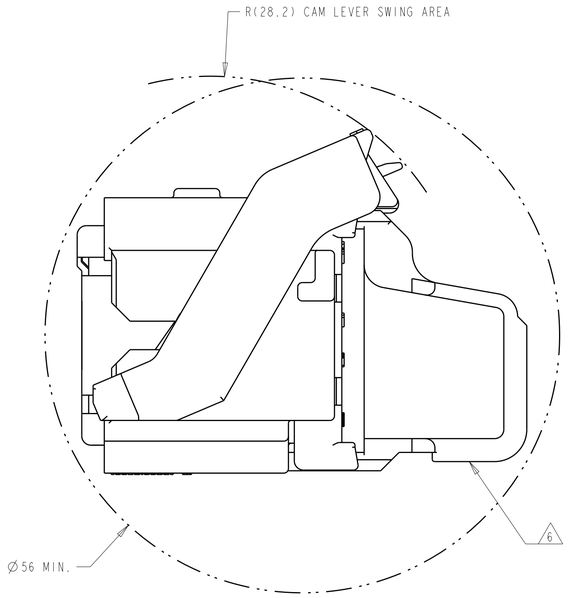

MINIMUM FEED THROUGH CONDITION
WITH 1mm CLEARANCE ALL AROUND
SHOWN WITH OPTION WIRESHIELD
TPA IS IN IT'S LOADED POSITION
CAM LEVER IS IN IT'S PRE-LOADED POSITION

KEYING OPTIONS
SCALE 2:1

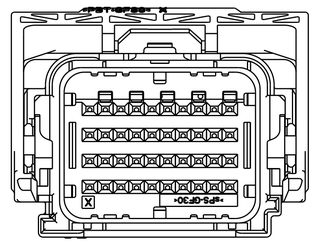

OPTION "G"

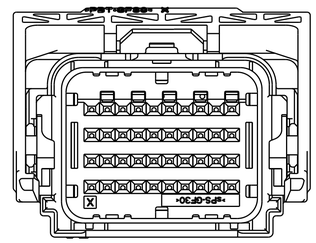

OPTION "H"

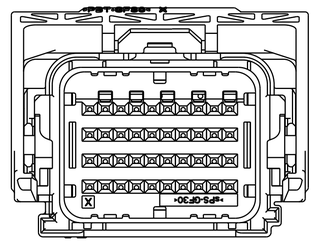

OPTION "J"

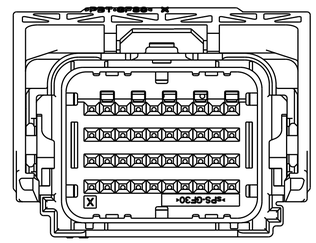

OPTION "K"

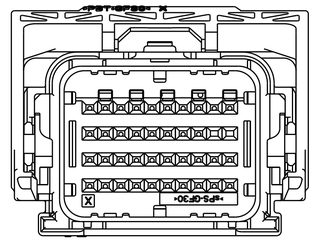

OPTION "L"

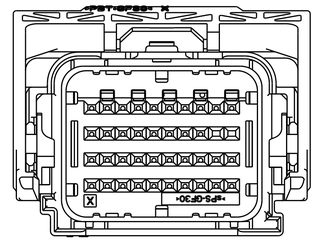

OPTION "M"

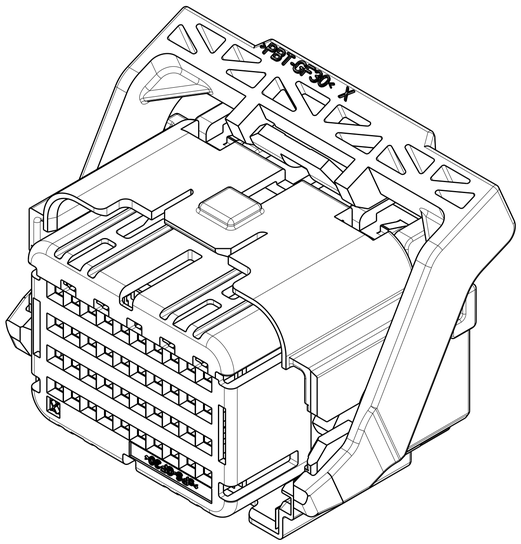

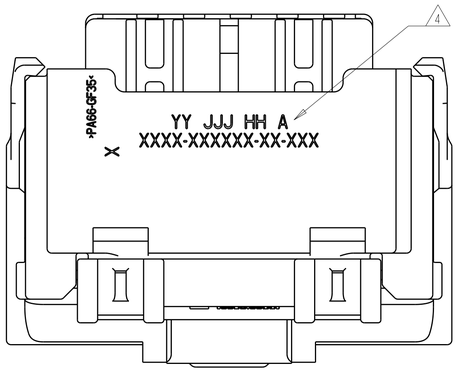

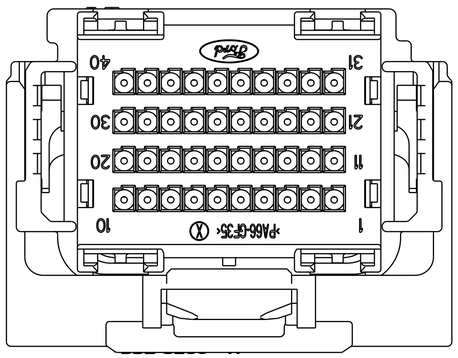

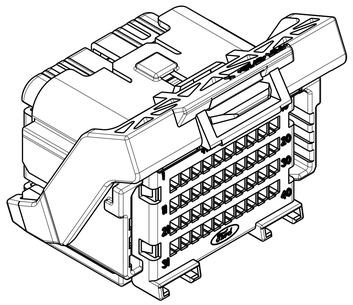

SCALE 2:1

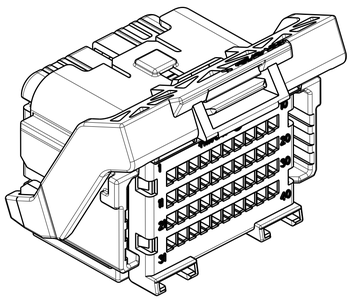

THIS VIEW SHOWS THE
OPTIONAL CAM LEVER

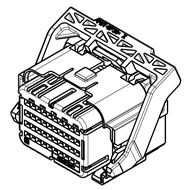

SCALE 1:1

1. APPLICABLE TERMINAL PART NUMBERS (SOLD SEPARATELY):
   FOR TIN APPLICATIONS: 1393367 AND 1393366.
   FOR GOLD APPLICATIONS: 1393365 AND 1393364.
   FOR TERMINATION AND REELING OPTIONS
   SEE DRAWINGS 1393367, 1393366, 1393365, AND 1393364.

2. COMPATIBLE WIRE SIZES FOR MAT SEAL DESIGN 1.19 TO 2.06 O.D.
   (22-18 AWG, 0.35-0.75 mm2)

3. TPA AND CAM LEVER ARE SHIPPED IN THEIR PRE-LOADED POSITION.
   ALL ASSEMBLIES ARE TO BE TRAY PACKAGED.

4. CUSTOMER PART NUMBER AND TRACEABILITY CODE (YY = TWO DIGIT YEAR,
   JJJ = JULIAN DAY, HH = TWO DIGIT MILITARY HOUR, A = ASSEMBLY PROCESS
   USED) ARE PRINTED IN THIS LOCATION.

5. PART ASSEMBLY WEIGHT WITHOUT TERMINALS AND WITH STANDARD PIN-OUT
   CONFIGURATION IS 24.71 GRAMS.

6. OPTIONAL WIRESHIELD P/N 8-1419157-8 (SOLD SEPARATELY). PLEASE CONTACT
   YOUR TE SALES REPRESENTATIVE FOR AVAILABILITY AND PRICING.

KEYING OPTION "G" SHOWN
SEE SHEET 2 FOR BILL OF
MATERIAL AND PIN-OUT CHARTS

THIS DRAWING IS A CONTROLLED DOCUMENT.

DIMENSIONS: mm

TOLERANCES UNLESS OTHERWISE SPECIFIED:
0 PLC ±-
1 PLC ±0.3
2 PLC ±0.10
3 PLC ±-
4 PLC ±-
ANGLES ±1°

MATERIAL: SEE CHART ON SHEET 2
FINISH: - / -

DWN M. FORISKA 19APR2002
CHK M. FORISKA 19APR2002
APVD A. VALASEK 19APR2002
PRODUCT SPEC -
APPLICATION SPEC -
WEIGHT SEE NOTE 5

TE Connectivity

NAME: 40 WAY ARM, PLUG ASSEMBLY WITHOUT SHORTING BARS, CUSTOMER SPEC.

SIZE A1 | CAGE CODE 00779 | DRAWING NO C-8-1419157-7 | RESTRICTED TO

CUSTOMER DRAWING | SCALE 3:1 | SHEET 1 OF 5 | REV CK

4805 (3/13)

THIS DRAWING IS UNPUBLISHED. RELEASED FOR PUBLICATION
© COPYRIGHT 2018 BY - TE CONNECTIVITY ALL RIGHTS RESERVED.

REVISIONS

P	LTR	DESCRIPTION	DATE	DWN	APVD
	-	SEE SHEET 1	-	-	-

ASSEMBLY PART NUMBERS

5-1924513-8	5-1924513-7	5-1924513-6	5-1924513-5	5-1924513-4	5-1924513-3	5-1924513-2	5-1924513-1	5-1924513-0	4-1924513-9	4-1924513-8	4-1924513-7	4-1924513-6	4-1924513-5	4-1924513-4	4-1924513-3	4-1924513-2	4-1924513-1	4-1924513-0	3-1924513-9	3-1924513-8	3-1924513-7	3-1924513-6	3-1924513-5	3-1924513-4	3-1924513-3	3-1924513-2	3-1924513-1	3-1924513-0	2-1924513-9	2-1924513-8	2-1924513-7	2-1924513-6	2-1924513-5	2-1924513-4	2-1924513-3	2-1924513-2	2-1924513-1	2-1924513-0	1-1924513-9	1-1924513-8	1-1924513-7	1-1924513-6	1-1924513-5	1-1924513-4	1-1924513-3	1-1924513-2	1-1924513-1	1-1924513-0	1924513-9	1924513-8	1924513-7	1924513-6	1924513-5	1924513-4	1924513-3	1924513-2	1924513-1	1438679-1	1438620-1	1438619-1	1438618-4	1438618-3	1438618-2	1438618-1	1438617-1	ITEM	DESCRIPTION	MATERIAL	FINISH/COLOR
																																																																		6	CAM LEVER	PBT 30% GF	GRAY
1	1	1	1	1	1	1	1	1	1	1	1	1	1	1	1	1	1	1	1	1	1	1	1	1	1	1	1	1	1	1	1	1	1	1	1	1	1	1	1	1	1	1	1	1	1	1	1	1	1	1	1	1	1	1	1	1	1									6	CAM LEVER WITH MODIFIED TAB	PA66 35% GF	GRAY
																																																										1	1	1	1	1	1	1	1	6	CAM LEVER WITH MODIFIED TAB	PBT 30% GF	GRAY
1	1	1	1	1	1	1	1	1	1	1	1	1	1	1	1	1	1	1	1	1	1	1	1	1	1	1	1	1	1	1	1	1	1	1	1	1	1	1	1	1	1	1	1	1	1	1	1	1	1	1	1	1	1	1	1	1	1	1	1	1	1	1	1	1	1	5	PERIMETER SEAL	SILICONE	GREEN
1	1	1	1	1	1	1	1	1	1	1	1	1	1	1	1	1	1	1	1	1	1	1	1	1	1	1	1	1	1	1	1	1	1	1	1	1	1	1	1	1	1	1	1	1	1	1	1	1	1	1	1	1	1	1	1	1	1	1	1	1	1	1	1	1	1	4	GROMMET	SILICONE	BROWN
1	1	1	1	1	1	1	1	1	1	1	1	1	1	1	1	1	1	1	1	1	1	1	1	1	1	1	1	1	1	1	1	1	1	1	1	1	1	1	1	1	1	1	1	1	1	1	1	1	1	1	1	1	1	1	1	1	1	1	1	1	1	1	1	1	1	3	COVER	PA66 35% GF	BLACK
1	1	1	1	1	1	1	1	1	1	1	1	1	1	1	1	1	1	1	1	1	1	1	1	1	1	1	1	1	1	1	1	1	1	1	1	1	1	1	1	1	1	1	1	1	1	1	1	1	1	1	1	1	1	1	1	1	1									2	TPA FOR NON-SHORTING BAR APPLICATIONS	sPS 30% GF	NATURAL
																																																										1	1	1	1	1	1	1	1	2	TPA FOR NON-SHORTING BAR APPLICATIONS	sPS 30% GF	RED
																																																										1								1	PLUG WITH KEYING OPTION "K" AND 5 SHORTING BAR POSITIONS CONFIGURATION	PA66 35% GF	BLACK
																																																											1							1	PLUG WITH KEYING OPTION "L" AND 5 SHORTING BAR POSITIONS CONFIGURATION	PA66 35% GF	BLACK
1	1	1	1	1	1	1	1	1	1	1	1	1	1	1	1	1	1	1	1	1	1	1	1	1	1	1	1	1	1	1	1	1	1	1	1	1	1	1	1	1	1	1	1	1	1	1	1	1	1	1	1	1	1	1	1	1	1			1						1	PLUG WITH KEYING OPTION "J" AND 5 SHORTING BAR POSITIONS CONFIGURATION	PA66 35% GF	BLACK
																																																													1	1	1	1		1	PLUG WITH KEYING OPTION "H" AND 5 SHORTING BAR POSITIONS CONFIGURATION	PA66 35% GF	BLACK
																																																																	1	1	PLUG WITH KEYING OPTION "G" AND 5 SHORTING BAR POSITIONS CONFIGURATION	PA66 35% GF	BLACK

QUANTITY

ASSEMBLY PART NUMBERS

3-1438098-2	3-1438098-1	3-1438098-0	2-1438098-9	2-1438098-8	2-1438098-7	5-1438099-1	5-1438099-0	4-1438099-9	4-1438099-8	4-1438099-7	4-1438099-6	4-1438099-5	4-1438099-4	4-1438099-3	4-1438099-2	4-1438099-1	ITEM	DESCRIPTION	MATERIAL	FINISH/COLOR
1	1	1	1	1	1	1	1	1	1	1	1	1	1	1	1	1	6	CAM LEVER	PBT 30% GF	GRAY
																	6	CAM LEVER WITH MODIFIED TAB	PA66 35% GF	GRAY
																	6	CAM LEVER WITH MODIFIED TAB	PBT 30% GF	GRAY
1	1	1	1	1	1	1	1	1	1	1	1	1	1	1	1	1	5	PERIMETER SEAL	SILICONE	GREEN
1	1	1	1	1	1	1	1	1	1	1	1	1	1	1	1	1	4	GROMMET	SILICONE	BROWN
1	1	1	1	1	1	1	1	1	1	1	1	1	1	1	1	1	3	COVER	PA66 35% GF	BLACK
																	2	TPA FOR NON-SHORTING BAR APPLICATIONS	sPS 30% GF	NATURAL
1	1	1	1	1	1	1	1	1	1	1	1	1	1	1	1	1	2	TPA FOR NON-SHORTING BAR APPLICATIONS	sPS 30% GF	RED
																	1	PLUG WITH KEYING OPTION "K" AND 5 SHORTING BAR POSITIONS CONFIGURATION	PA66 35% GF	BLACK
																	1	PLUG WITH KEYING OPTION "L" AND 5 SHORTING BAR POSITIONS CONFIGURATION	PA66 35% GF	BLACK
						1	1	1	1	1	1	1	1	1	1	1	1	PLUG WITH KEYING OPTION "J" AND 5 SHORTING BAR POSITIONS CONFIGURATION	PA66 35% GF	BLACK
1	1	1	1	1	1												1	PLUG WITH KEYING OPTION "H" AND 5 SHORTING BAR POSITIONS CONFIGURATION	PA66 35% GF	BLACK
																	1	PLUG WITH KEYING OPTION "G" AND 5 SHORTING BAR POSITIONS CONFIGURATION	PA66 35% GF	BLACK

QUANTITY

ASSEMBLY PART NUMBERS

4-1438099-0	3-1438099-9	3-1438099-8	3-1438099-7	3-1438099-6	3-1438099-5	3-1438099-4	3-1438099-3	3-1438099-2	3-1438099-1	3-1438099-0	2-1438099-9	2-1438099-8	2-1438099-7	2-1438099-6	2-1438099-5	2-1438099-4	2-1438099-3	2-1438099-2	2-1438099-1	2-1438099-0	1-1438099-9	1-1438099-8	1-1438099-7	1-1438099-6	1-1438099-5	1-1438099-4	1-1438099-3	1-1438099-2	1-1438099-1	1-1438099-0	1438099-9	1438099-8	1438099-7	1438099-6	1438099-5	1438099-4	1438099-3	1438099-2	1438099-1	2-1438098-6	2-1438098-5	2-1438098-4	2-1438098-3	2-1438098-2	2-1438098-1	2-1438098-0	1-1438098-9	1-1438098-8	1-1438098-7	1-1438098-6	1-1438098-5	1-1438098-4	1-1438098-3	1-1438098-2	1-1438098-1	1-1438098-0	1438098-9	1438098-8	1438098-7	1438098-6	1438098-5	1438098-4	1438098-3	1438098-2	1438098-1	8-1419157-5	8-1419157-7	ITEM	DESCRIPTION	MATERIAL	FINISH/COLOR
1	1	1	1	1	1	1	1	1	1	1	1	1	1	1	1	1	1	1	1	1	1	1	1	1	1	1	1	1	1	1	1	1	1	1	1	1	1	1	1	1	1	1	1	1	1	1	1	1	1	1	1	1	1	1	1	1	1	1	1	1	1	1	1	1	1	1	1	6	CAM LEVER	PBT 30% GF	GRAY
																																																																				6	CAM LEVER WITH MODIFIED TAB	PA66 35% GF	GRAY
																																																																				6	CAM LEVER WITH MODIFIED TAB	PBT 30% GF	GRAY
1	1	1	1	1	1	1	1	1	1	1	1	1	1	1	1	1	1	1	1	1	1	1	1	1	1	1	1	1	1	1	1	1	1	1	1	1	1	1	1	1	1	1	1	1	1	1	1	1	1	1	1	1	1	1	1	1	1	1	1	1	1	1	1	1	1	1	1	5	PERIMETER SEAL	SILICONE	GREEN
1	1	1	1	1	1	1	1	1	1	1	1	1	1	1	1	1	1	1	1	1	1	1	1	1	1	1	1	1	1	1	1	1	1	1	1	1	1	1	1	1	1	1	1	1	1	1	1	1	1	1	1	1	1	1	1	1	1	1	1	1	1	1	1	1	1	1	1	4	GROMMET	SILICONE	BROWN
1	1	1	1	1	1	1	1	1	1	1	1	1	1	1	1	1	1	1	1	1	1	1	1	1	1	1	1	1	1	1	1	1	1	1	1	1	1	1	1	1	1	1	1	1	1	1	1	1	1	1	1	1	1	1	1	1	1	1	1	1	1	1	1	1	1	1	1	3	COVER	PA66 35% GF	BLACK
																																																																				2	TPA FOR NON-SHORTING BAR APPLICATIONS	sPS 30% GF	NATURAL
1	1	1	1	1	1	1	1	1	1	1	1	1	1	1	1	1	1	1	1	1	1	1	1	1	1	1	1	1	1	1	1	1	1	1	1	1	1	1	1	1	1	1	1	1	1	1	1	1	1	1	1	1	1	1	1	1	1	1	1	1	1	1	1	1	1	1	1	2	TPA FOR NON-SHORTING BAR APPLICATIONS	sPS 30% GF	RED
																																																																				1	PLUG WITH KEYING OPTION "K" AND 5 SHORTING BAR POSITIONS CONFIGURATION	PA66 35% GF	BLACK
																																																																				1	PLUG WITH KEYING OPTION "L" AND 5 SHORTING BAR POSITIONS CONFIGURATION	PA66 35% GF	BLACK
1	1	1	1	1	1	1	1	1	1	1	1	1	1	1	1	1	1	1	1	1	1	1	1	1	1	1	1	1	1	1	1	1	1	1	1	1	1	1	1																													1	PLUG WITH KEYING OPTION "J" AND 5 SHORTING BAR POSITIONS CONFIGURATION	PA66 35% GF	BLACK
																																								1	1	1	1	1	1	1	1	1	1	1	1	1	1	1	1	1	1	1	1	1	1	1	1	1	1			1	PLUG WITH KEYING OPTION "H" AND 5 SHORTING BAR POSITIONS CONFIGURATION	PA66 35% GF	BLACK
																																																																		1	1	1	PLUG WITH KEYING OPTION "G" AND 5 SHORTING BAR POSITIONS CONFIGURATION	PA66 35% GF	BLACK

QUANTITY

THIS DRAWING IS A CONTROLLED DOCUMENT.

DIMENSIONS: mm	TOLERANCES UNLESS OTHERWISE SPECIFIED:
	0 PLC ±- 1 PLC ±0.3 2 PLC ±0.10 3 PLC ±- 4 PLC ±- ANGLES ±3°
MATERIAL: SEE CHART ON SHEET 2	FINISH: - -

DWN M. FORISKA 19APR2002
CHK M. FORISKA 19APR2002
APVD A. VALASEK 19APR2002
PRODUCT SPEC -
APPLICATION SPEC -
WEIGHT SEE NOTE 5
CUSTOMER DRAWING

TE Connectivity

NAME: 40 WAY ARM, PLUG ASSEMBLY WITHOUT SHORTING BARS, CUSTOMER SPEC.

SIZE	CAGE CODE	DRAWING NO	RESTRICTED TO
A1	00779	C-8-1419157-7	

SCALE 3:1 | SHEET 2 OF 5 | REV CK

4805 (3/13)

THIS DRAWING IS UNPUBLISHED. RELEASED FOR PUBLICATION
© COPYRIGHT 2018 BY - TE CONNECTIVITY ALL RIGHTS RESERVED.

REVISIONS

P	LTR	DESCRIPTION	DATE	DWN	APVD
	-	SEE SHEET 1	-	-	-

ASSEMBLY PART NUMBERS

QUANTITY 6-1924513-1	QUANTITY 6-1924513-0	QUANTITY 5-1924513-9	ITEM	DESCRIPTION	MATERIAL	FINISH/COLOR
			6	CAM LEVER	PBT 30% GF	GRAY
1	1	1	6	CAM LEVER WITH MODIFIED TAB	PA66 35% GF	GRAY
			6	CAM LEVER WITH MODIFIED TAB	PBT 30% GF	GRAY
1	1	1	5	PERIMETER SEAL	SILICONE	GREEN
1	1	1	4	GROMMET	SILICONE	BROWN
1	1	1	3	COVER	PA66 35% GF	BLACK
1	1	1	2	TPA FOR NON-SHORTING BAR APPLICATIONS	sPS 30% GF	NATURAL
			2	TPA FOR NON-SHORTING BAR APPLICATIONS	sPS 30% GF	RED
			1	PLUG WITH KEYING OPTION "K" AND 5 SHORTING BAR POSITIONS CONFIGURATION	PA66 35% GF	BLACK
			1	PLUG WITH KEYING OPTION "L" AND 5 SHORTING BAR POSITIONS CONFIGURATION	PA66 35% GF	BLACK
1	1	1	1	PLUG WITH KEYING OPTION "J" AND 5 SHORTING BAR POSITIONS CONFIGURATION	PA66 35% GF	BLACK
			1	PLUG WITH KEYING OPTION "H" AND 5 SHORTING BAR POSITIONS CONFIGURATION	PA66 35% GF	BLACK
			1	PLUG WITH KEYING OPTION "G" AND 5 SHORTING BAR POSITIONS CONFIGURATION	PA66 35% GF	BLACK

ASSEMBLY PART NUMBERS

QUANTITY 2138987-2	QUANTITY 2138987-1	QUANTITY 2098034-1	QUANTITY 1-1438435-6	QUANTITY 1-1438435-5	QUANTITY 1-1438435-4	QUANTITY 1-1438435-3	QUANTITY 1-1438435-2	QUANTITY 1-1438435-1	QUANTITY 1-1438435-0	QUANTITY 1-1438435-9	QUANTITY 1-1438435-8	QUANTITY 1-1438435-7	QUANTITY 1-1438435-6	QUANTITY 1-1438435-5	QUANTITY 1-1438435-4	QUANTITY 1-1438435-3	QUANTITY 1-1438435-2	QUANTITY 1-1438435-1	ITEM	DESCRIPTION	MATERIAL	FINISH/COLOR
1	1		1	1	1	1	1	1	1	1	1	1	1	1	1	1	1	1	6	CAM LEVER	PBT 30% GF	GRAY
		1																	6	CAM LEVER WITH MODIFIED TAB	PA66 35% GF	GRAY
																			6	CAM LEVER WITH MODIFIED TAB	PBT 30% GF	GRAY
1	1	1	1	1	1	1	1	1	1	1	1	1	1	1	1	1	1	1	5	PERIMETER SEAL	SILICONE	GREEN
1	1	1	1	1	1	1	1	1	1	1	1	1	1	1	1	1	1	1	4	GROMMET	SILICONE	BROWN
1	1	1	1	1	1	1	1	1	1	1	1	1	1	1	1	1	1	1	3	COVER	PA66 35% GF	BLACK
		1																	2	TPA FOR NON-SHORTING BAR APPLICATIONS	sPS 30% GF	NATURAL
1	1		1	1	1	1	1	1	1	1	1	1	1	1	1	1	1	1	2	TPA FOR NON-SHORTING BAR APPLICATIONS	sPS 30% GF	RED
																			1	PLUG WITH KEYING OPTION "K" AND 5 SHORTING BAR POSITIONS CONFIGURATION	PA66 35% GF	BLACK
			1	1	1	1	1	1	1	1	1	1	1	1	1	1	1	1	1	PLUG WITH KEYING OPTION "L" AND 5 SHORTING BAR POSITIONS CONFIGURATION	PA66 35% GF	BLACK
																			1	PLUG WITH KEYING OPTION "J" AND 5 SHORTING BAR POSITIONS CONFIGURATION	PA66 35% GF	BLACK
		1																	1	PLUG WITH KEYING OPTION "H" AND 5 SHORTING BAR POSITIONS CONFIGURATION	PA66 35% GF	BLACK
1	1																		1	PLUG WITH KEYING OPTION "G" AND 5 SHORTING BAR POSITIONS CONFIGURATION	PA66 35% GF	BLACK

THIS DRAWING IS A CONTROLLED DOCUMENT.

DIMENSIONS: mm

TOLERANCES UNLESS OTHERWISE SPECIFIED:
0 PLC ±-
1 PLC ±0.3
2 PLC ±0.10
3 PLC ±-
4 PLC ±-
ANGLES ±1°

MATERIAL: SEE CHART ON SHEET 2
FINISH: - -

DWN M. FORISKA 19APR2002
CHK M. FORISKA 19APR2002
APVD A. VALASEK 19APR2002
PRODUCT SPEC -
APPLICATION SPEC -
WEIGHT -

TE Connectivity

NAME: 40 WAY ARM, PLUG ASSEMBLY WITHOUT SHORTING BARS, CUSTOMER SPEC.

SIZE	CAGE CODE	DRAWING NO	RESTRICTED TO
A1	00779	C-8-1419157-7	

CUSTOMER DRAWING | SCALE 3:1 | SHEET 3 OF 5 | REV CK

4805 (3/13)

THIS DRAWING IS UNPUBLISHED. RELEASED FOR PUBLICATION
© COPYRIGHT 2018 BY - TE CONNECTIVITY ALL RIGHTS RESERVED.

REVISIONS

P	LTR	DESCRIPTION	DATE	DWN	APVD
	-	SEE SHEET 1	-	-	-

PIN-OUT CHART

TERMINAL HOLE POSITION	ASSEMBLY PART NUMBER	PLUG KEYING OPTION
5 6 13 14 15 16 21 22 23 24 32 33 37	4-1438099-4	KEY "J"
1 2 5 6 7 8 11 12 13 14 15 16 19 20 21 22 23 24 26 27 28 29 32 33 37 39 40	4-1438099-3	KEY "J"
5 6 13 14 15 16 21 22 23 24 32 33 37 39 40	4-1438099-2	KEY "J"
1 2 5 6 7 8 11 12 13 14 15 16 19 20 21 22 23 24 26 27 28 29 31 32 33 35 36 37 38 39 40	4-1438099-1	KEY "J"
5 6 13 14 15 16 21 22 23 24 31 32 33 35 36 37 38 39 40	4-1438099-0	KEY "J"
1 2 5 6 7 8 11 12 13 14 15 16 19 20 21 22 23 24 26 27 28 29 31 32 33 35 36 37 38	3-1438099-9	KEY "J"
1 2 3 4 5 6 7 8 11 12 13 14 15 16 19 20 21 22 23 24 26 27 28 29 31 32 33 35 36 37 38	3-1438099-8	KEY "J"
5 6 13 14 15 16 30 31 35 36 37 38	3-1438099-7	KEY "J"
5 6 13 14 15 16 30 31 35 36 37 38 39 40	3-1438099-6	KEY "J"
1 2 3 4 5 6 7 8 11 12 13 14 15 16 19 20 21 22 23 24 26 27 28 29 32 33 34	3-1438099-5	KEY "J"
3 4 5 6 13 14 15 16 32 33 34	3-1438099-4	KEY "J"
5 6 13 14 15 16 21 22 23 24 31 32 33 35 36 37 38	3-1438099-3	KEY "J"
3 4 5 6 13 14 15 16 21 22 23 24 31 32 33 35 36 37 38 39	3-1438099-2	KEY "J"
3 4 5 6 13 14 15 16 31 32 33 34 35 36 38	3-1438099-1	KEY "J"
3 4 5 6 13 14 15 16 31 35 36 37 38	3-1438099-0	KEY "J"
3 4 13 14 31 32 35 36 37 38	2-1438099-9	KEY "J"
3 4 5 6 13 14 15 16 21 22 23 24 31 32 33 35 36 37 38 39 40	2-1438099-8	KEY "J"
3 4 5 6 13 14 15 16 21 22 23 24 31 32 35 36 37 38 39 40	2-1438099-7	KEY "J"
3 4 5 6 13 14 15 16 21 22 23 31 32 35 36 37 38 39 40	2-1438099-6	KEY "J"
13 14 25 26 31 39 40	2-1438099-5	KEY "J"
1 2 5 6 7 8 11 12 15 16 17 18 21 22 23 24 25 26 29 30 31 32 33 35 36 37 38 39 40	2-1438099-4	KEY "J"
5 6 7 8 15 16 17 18 23 24 25 26 37 38 39 40	2-1438099-3	KEY "J"
3 4 5 6 11 12 15 16 31 32 35 36 37 38 39 40	2-1438099-2	KEY "J"
3 4 5 6 13 14 15 16 31 34 35 36 37 38 39 40	2-1438099-1	KEY "J"
1 2 11 12 25 26 31 39 40	2-1438099-0	KEY "J"
1 2 5 6 7 8 11 12 15 16 17 18 19 20 21 22 23 24 25 26 29 30 31 32 33 35 36 37 38 39 40	1-1438099-9	KEY "J"
23 24 25 26 31 37 38 39 40	1-1438099-8	KEY "J"
11 12 23 24 25 26 31 37 38 39 40	1-1438099-7	KEY "J"
11 12 25 26 31 39 40	1-1438099-6	KEY "J"
25 26 31 39 40	1-1438099-5	KEY "J"
25 26 29 30 31 39 40	1-1438099-4	KEY "J"
1 2 3 4 5 6 7 8 9 10 11 12 13 14 15 16 17 18 19 20 21 22 23 24 25 30 31 32 33 34 35 36 37 38 39 40	1-1438099-3	KEY "J"
3 4 5 6 13 14 15 16 31 35 36 37 38 39 40	1-1438099-2	KEY "J"
3 4 5 6 11 12 15 16 21 22 23 24 31 32 33 35 36 37 38 39 40	1-1438099-1	KEY "J"
5 6 11 12 13 14 15 16 21 22 23 24 31 32 35 36 37 38 39 40	1-1438099-0	KEY "J"
5 6 15 16 31 32 35 36 37 38 39 40	1438099-9	KEY "J"
5 6 13 14 15 16 21 22 23 24 33	2-1438098-6	KEY "H"
1 2 3 4 5 6 7 8 11 12 13 14 15 16 19 20 22 23 24 26 27 28 29 31 32 33 34 36 37 38 39 40	2-1438098-5	KEY "H"
3 4 5 6 13 14 15 16 22 23 24 31 32 33 34 36 37 38 39 40	2-1438098-4	KEY "H"
3 4 5 6 13 14 15 16 25 30 32 33 35 37 39	2-1438098-3	KEY "H"
1 2 3 4 5 6 7 8 11 12 13 14 15 16 19 20 22 23 24 25 26 27 28 29 30 31 32 33 35 37 39	2-1438098-2	KEY "H"
	1438679-1	KEY "K"
	1438620-1	KEY "L"
	1438619-1	KEY "J"
	1438618-1	KEY "H"
	1438617-1	KEY "G"
3 4 5 6 13 14 15 16 21 22 23 24 31 32 35 36 37 38 39 40	2-1438098-1	KEY "H"
3 4 5 6 13 14 15 16 21 22 23 24 30 31 32 33 35 36 37 38 39 40	2-1438098-0	KEY "H"
3 4 5 6 13 14 15 16 22 23 30 31 32 33 34 35 37 39	1-1438098-9	KEY "H"
3 4 5 6 13 14 15 16 21 22 23 24 33 38	1-1438435-0	KEY "L"
1 2 3 4 5 6 7 8 11 12 13 14 15 16 19 20 22 23 24 26 27 28 29 30 31 32 33 35 36 37 38 39 40	1438435-9	KEY "L"
1 2 3 4 5 6 7 8 9 10 11 12 13 14 15 16 17 18 19 20 21 22 23 24 26 27 28 29 30 31 32 33 35 36 37 38 39 40	1438435-8	KEY "L"
1 2 3 4 5 6 11 12 13 14 15 16 21 22 23 24 31 32 33 35 36 37 38 39 40	1438435-7	KEY "L"
1 2 3 4 5 6 11 12 13 14 15 16 21 22 23 24 31 32 35 36 37 38 39 40	1438435-6	KEY "L"
1 2 3 4 5 6 11 12 13 14 15 16 21 22 23 24 30 31 32 33 35 36 37 38 39 40	1438435-5	KEY "L"
3 4 5 6 13 14 15 16 21 22 23 24 31 32 33 35 36 37 38 39 40	1438435-4	KEY "L"
1 2 3 4 5 6 7 8 11 12 13 14 15 16 19 20 21 22 23 24 25 30 31 32 33 34 35 36 37 38 39 40	1438435-3	KEY "L"
	1438435-2	KEY "L"
3 4 5 6 13 14 15 16 21 22 23 24 30 31 32 33 35 36 37 38 39 40	1438435-1	KEY "L"
1 2 3 4 5 6 7 8 11 12 13 14 15 16 19 20 22 23 26 27 28 29 30 31 32 33 34 35 37 39	1-1438098-8	KEY "H"
3 4 5 6 13 14 15 16 22 23 31 32 33 34 35 37 39	1-1438098-7	KEY "H"
1 2 3 4 5 6 7 8 11 12 13 14 15 16 19 20 22 23 24 26 27 28 29 31 35 36 37 38 39 40	1-1438098-6	KEY "H"
3 4 5 6 7 8 13 14 15 16 19 20 22 23 24 31 35 36 37 38 39 40	1-1438098-5	KEY "H"
3 4 5 6 13 14 15 16 22 23 24 31 35 36 37 38 39 40	1-1438098-4	KEY "H"
1 2 3 4 5 6 7 8 11 12 13 14 15 16 19 20 22 23 24 26 27 28 29 30 31 32 33 34 35 36 37 38 39 40	1-1438098-3	KEY "H"
3 4 5 6 13 14 15 16 22 23 24 30 31 32 33 34 35 36 37 38 39 40	1-1438098-2	KEY "H"
1 2 3 4 5 6 7 8 11 12 13 14 15 16 22 23 24 26 27 28 29 31 35 36 37 38 39 40	1438098-9	KEY "H"
1 2 3 4 5 6 7 8 9 10 11 12 13 14 15 16 22 24 33 35	1438098-7	KEY "H"
1 2 3 4 5 6 7 8 9 10 11 12 13 14 15 16 22 23 24 31 32 33 34 35 36	1438098-1	KEY "H"
3 4 5 6 13 14 15 16 22 23 31 32 35 37 39	1438098-5	KEY "J"
3 4 5 6 13 14 15 16 21 22 23 24 30 31 32 33 35 36 37 38 39 40	1438098-4	KEY "J"
1 2 3 4 5 6 7 8 9 10 11 12 13 14 15 16 21 22 23 24 31 35 36 37 38 39 40	1438098-2	KEY "J"
1 2 3 4 5 6 7 8 9 10 11 12 13 14 15 16 17 18 19 20 21 22 23 24 25 26 27 28 29 30 31 32 33 34 35 36 37 38 39 40	1438098-0	KEY "H"
1 2 3 4 5 6 7 8 9 10 11 12 13 14 15 16 17 18 21 22 23 24 25 26 29 30 31 32 33 35 36 37 38 39 40	1438098-8	KEY "H"
1 2 3 4 5 6 7 8 9 10 11 12 13 14 15 16 17 18 21 22 23 24 25 26 29 30 31 32 33 35 36 37 38 39 40	1438098-6	KEY "H"
1 2 3 4 5 6 7 8 9 10 11 12 13 14 15 16 17 18 21 22 23 24 25 26 29 30 31 32 33 35 36 37 38 39 40	1438098-1	KEY "H"
1 2 3 4 5 6 7 8 9 10 11 12 13 14 15 16 17 18 21 22 23 24 25 26 29 30 31 32 33 35 36 37 38 39 40	1438098-7	KEY "H"
1 2 3 4 5 6 11 12 13 14 15 16 21 22 23 24 30 31 32 33 35 36 37 38 39 40	1438098-6	KEY "H"
1 2 3 4 5 6 7 8 11 12 13 14 15 16 19 20 22 23 26 27 28 29 31 32 35 37 39	1438098-5	KEY "H"
1 2 3 4 5 6 7 8 9 10 11 12 13 14 15 16 21 22 24 31 32 33 35 37 38 39 40	1438098-4	KEY "H"
1 2 3 4 5 6 7 8 9 10 11 12 13 14 15 16 17 18 21 22 24 29 30 35 37 38 39 40	1438098-3	KEY "H"
1 2 3 4 5 6 7 8 9 10 11 12 13 14 15 16 17 18 21 22 24 29 30 31 32 33 35 37 38 39 40	1438098-2	KEY "H"
1 2 3 4 5 6 7 8 9 10 24 35 36	8-1419157-5	KEY "G"
	1438099-1	KEY "J"
	1438098-1	KEY "H"
	8-1419157-7	KEY "G"
1 2 3 4 5 6 7 8 9 10 11 12 13 14 15 16 17 18 19 20 21 22 23 24 25 26 27 28 29 30 31 32 33 34 35 36 37 38 39 40	ASSEMBLY PART NUMBER	PLUG KEYING OPTION

CAVITIES WITH A NUMERIC SYMBOL INDICATE CLOSED TERMINAL HOLE POSITIONS

BLANK CAVITIES INDICATE OPEN TERMINAL HOLE POSITIONS

4805 (3/13)

PIN-OUT CHART

TERMINAL HOLE POSITION	ASSEMBLY PART NUMBER	PLUG KEYING OPTION
2098034-1	KEY "H"
1 2 3 4 5 6 11 12 13 14 15 16 21 22 23 24 26 27 28 29 33 35 36 37 38 39 1-1438435-6	KEY "L"
1 2 3 4 5 6 11 12 13 14 15 16 21 22 23 24 33 35 36 37 38 39 1-1438435-5	KEY "L"
3 4 5 6 13 14 15 16 21 22 23 24 31 32 33 36 38 1-1438435-4	KEY "L"
3 4 5 6 13 14 15 16 21 22 23 24 33 35 36 37 38 39 1-1438435-3	KEY "L"
3 4 5 6 13 14 15 16 21 22 23 24 33 36 38 1-1438435-2	KEY "L"
1 2 3 4 5 6 9 10 11 12 13 14 15 16 17 18 21 22 23 24 30 31 32 33 35 36 37 38 39 40 1-1438435-1	KEY "L"
3 5 7 8 13 14 15 16 17 18 19 20 21 22 23 24 25 30 31 32 35 37 39 4-1924513-8	KEY "J"
3 5 7 8 13 14 15 16 17 18 19 20 21 22 23 24 25 26 27 30 31 32 33 34 35 37 39 4-1924513-7	KEY "J"
3 5 7 8 13 14 15 16 17 18 19 20 21 22 23 24 25 28 30 31 32 35 37 39 4-1924513-6	KEY "J"
5 6 7 8 15 16 19 20 26 32 39 40 4-1924513-5	KEY "J"
1 2 5 6 7 8 11 12 15 16 17 18 19 20 21 22 23 24 26 32 35 36 37 38 39 40 4-1924513-4	KEY "J"
7 8 17 18 25 26 31 39 40 4-1924513-3	KEY "J"
3 5 7 8 13 14 15 16 17 18 19 20 21 22 23 24 25 26 27 28 30 31 32 33 34 35 37 39 4-1924513-2	KEY "J"
13 14 25 26 31 39 40 4-1924513-1	KEY "J"
3 5 7 8 13 14 15 16 17 18 19 20 21 22 23 24 25 26 27 28 30 31 32 33 34 35 37 40 4-1924513-0	KEY "J"
7 8 17 18 3-1924513-9	KEY "J"
3 4 5 6 7 8 15 16 17 18 21 22 23 24 25 26 35 36 37 38 39 40 3-1924513-8	KEY "J"
1 2 3 4 5 6 7 8 11 12 13 14 15 16 17 18 21 22 23 24 25 26 27 28 29 30 31 32 33 34 35 36 37 38 39 40 3-1924513-7	KEY "J"
1 2 11 12 25 26 39 40 3-1924513-6	KEY "J"
1 2 11 12 25 26 29 30 31 39 40 3-1924513-5	KEY "J"
5 6 7 8 15 16 17 18 23 24 25 26 29 30 37 38 39 40 3-1924513-4	KEY "J"
5 6 7 8 15 16 17 18 23 24 25 26 31 37 38 39 40 3-1924513-3	KEY "J"
25 26 39 40 3-1924513-2	KEY "J"
5 6 7 8 11 12 17 18 23 24 25 26 31 37 38 39 40 3-1924513-1	KEY "J"
1 2 11 12 19 20 25 26 29 30 31 32 33 39 40 3-1924513-0	KEY "J"
1 2 11 12 23 24 25 26 29 30 31 32 33 37 38 39 40 2-1924513-9	KEY "J"
1 2 11 12 19 20 23 24 25 26 29 30 31 32 33 37 38 39 40 2-1924513-8	KEY "J"
1 2 11 12 25 26 29 30 31 32 33 39 40 2-1924513-7	KEY "J"
1 2 5 6 7 8 11 12 15 16 17 18 21 22 23 24 25 26 29 30 31 32 33 35 36 37 38 39 40 2-1924513-6	KEY "J"
3 4 13 14 23 24 25 26 31 37 38 39 40 2-1924513-5	KEY "J"
3 4 13 14 25 26 31 39 40 2-1924513-4	KEY "J"
5 6 7 8 15 16 17 18 23 24 25 26 29 30 31 37 38 39 40 2-1924513-3	KEY "J"
3 4 5 6 11 12 15 16 31 32 35 36 37 38 39 40 2-1924513-2	KEY "J"
3 4 5 6 13 14 15 16 31 32 34 35 36 37 38 39 40 2-1924513-1	KEY "J"
1 2 11 12 25 26 31 39 40 2-1924513-0	KEY "J"
1 2 5 6 7 8 11 12 15 16 17 18 19 20 21 22 23 24 25 26 29 30 31 32 33 35 36 37 38 39 40 1-1924513-9	KEY "J"
23 24 25 26 31 37 38 39 40 1-1924513-8	KEY "J"
11 12 23 24 25 26 31 37 38 39 40 1-1924513-7	KEY "J"
11 12 25 26 31 39 40 1-1924513-6	KEY "J"
25 26 31 39 40 1-1924513-5	KEY "J"
25 26 29 30 31 39 40 1-1924513-4	KEY "J"
1 2 3 4 5 6 7 8 9 10 11 12 13 14 15 16 17 18 19 20 21 22 23 24 25 31 32 33 34 35 36 37 38 39 40 1-1924513-3	KEY "J"
3 4 5 6 13 14 15 16 31 35 36 37 38 39 40 1-1924513-2	KEY "J"
3 4 5 6 11 12 15 16 21 22 23 24 31 32 33 35 36 37 38 39 40 1-1924513-1	KEY "J"
5 6 11 12 13 14 15 16 21 22 23 24 31 32 35 36 37 38 39 40 1-1924513-0	KEY "J"
5 6 15 16 31 32 35 36 37 38 39 40 1924513-9	KEY "J"
1 2 3 4 5 6 11 12 13 14 15 16 21 22 23 24 31 32 35 36 37 38 39 40 1924513-8	KEY "J"
1 2 3 4 5 6 7 8 9 10 11 12 13 14 15 16 21 22 24 33 35 1924513-7	KEY "J"
1 2 3 4 5 6 7 8 9 10 11 12 13 14 15 16 21 22 23 24 25 26 31 32 33 34 35 36 1924513-6	KEY "J"
3 4 5 6 13 14 15 16 31 32 35 37 39 1924513-5	KEY "J"
3 4 5 6 13 14 15 16 21 22 23 24 30 31 32 33 35 36 37 38 39 40 1924513-4	KEY "J"
1 2 3 4 5 6 7 8 9 10 11 12 13 14 15 16 21 22 24 35 1924513-3	KEY "J"
1 2 3 4 5 6 7 8 9 10 11 12 13 14 15 16 21 22 24 31 32 33 35 1924513-2	KEY "J"
1924513-1	KEY "J"
3 4 13 14 31 35 36 37 38 5-1438099-1	KEY "J"
3 4 13 14 21 22 23 24 31 32 39 40 5-1438099-0	KEY "J"
5 6 13 14 15 16 21 22 23 24 33 4-1438099-9	KEY "J"
3 4 13 14 31 32 4-1438099-8	KEY "J"
1 2 3 4 5 6 7 8 11 12 13 14 15 16 19 20 21 22 23 24 26 27 28 29 30 31 32 33 34 35 36 37 38 4-1438099-7	KEY "J"
3 4 5 6 13 14 15 16 21 22 23 24 31 32 33 35 36 37 38 4-1438099-6	KEY "J"
1 2 5 6 7 8 11 12 13 14 15 16 19 20 21 22 23 24 25 26 29 30 31 32 33 37 38 39 40 4-1438099-5	KEY "J"
5 6 8 9 10 11 12 13 14 15 16 18 19 20 21 22 24 25 28 31 32 34 35 36 37 38 40 1438618-4	KEY "H"
3 4 5 6 13 14 33 34 36 37 38 39 1438618-3	KEY "H"
3 4 5 6 13 14 15 16 33 34 36 37 38 39 1438618-2	KEY "H"
33 35 37 39 40 3-1438098-2	KEY "H"
1 2 3 4 5 6 7 8 11 12 13 14 15 16 19 20 22 23 24 25 26 27 28 29 30 31 32 33 34 35 36 37 38 39 40 3-1438098-1	KEY "H"
3 4 5 6 13 14 15 16 25 30 32 33 34 35 36 37 38 39 40 3-1438098-0	KEY "H"
3 4 5 6 33 35 37 39 40 2-1438098-9	KEY "H"
5 6 13 14 15 16 21 22 23 24 33 35 36 37 38 39 2-1438098-8	KEY "H"
3 4 5 6 13 14 15 16 21 22 23 24 33 35 36 37 38 39 2-1438098-7	KEY "H"
1 2 3 4 5 6 7 8 9 10 11 12 13 14 15 16 17 18 19 20 21 22 23 24 25 26 27 28 29 30 31 32 33 34 35 36 37 38 39 40 ASSEMBLY PART NUMBER	PLUG KEYING OPTION

CAVITIES WITH A NUMERIC SYMBOL INDICATE CLOSED TERMINAL HOLE POSITIONS

BLANK CAVITIES INDICATE OPEN TERMINAL HOLE POSITIONS

THIS DRAWING IS A CONTROLLED DOCUMENT.

DIMENSIONS: mm

TOLERANCES UNLESS OTHERWISE SPECIFIED:
0 PLC ±-
1 PLC ±0.3
2 PLC ±0.10
3 PLC ±-
4 PLC ±-
ANGLES ±1°

MATERIAL: SEE CHART ON SHEET 2
FINISH: -
-

DWN M. FORISKA 19APR2002
CHK M. FORISKA 19APR2002
APVD A. VALASEK 19APR2002
PRODUCT SPEC -
APPLICATION SPEC -
WEIGHT -

TE Connectivity

NAME: 40 WAY ARM, PLUG ASSEMBLY WITHOUT SHORTING BARS, CUSTOMER SPEC.

SIZE	CAGE CODE	DRAWING NO	RESTRICTED TO
A1	00779	C-8-1419157-7	

CUSTOMER DRAWING | SCALE 3:1 | SHEET 4 OF 5 | REV CK

THIS DRAWING IS UNPUBLISHED. RELEASED FOR PUBLICATION
© COPYRIGHT 2018 BY - TE CONNECTIVITY ALL RIGHTS RESERVED.

REVISIONS

P	LTR	DESCRIPTION	DATE	DWN	APVD
	-	SEE SHEET 1	-	-	-

PIN-OUT CHART

1	2	3	4	5	6	7	8	9	10	11	12	13	14	15	16	17	18	19	20	21	22	23	24	25	26	27	28	29	30	31	32	33	34	35	36	37	38	39	40	ASSEMBLY PART NUMBER	PLUG KEYING OPTION
	2																18			21		23	24	25	26	27		29	30			33		35						6-1924513-1	KEY "J"
	2	3			6	7	8				12	13	14	15	16	17	18	19	20	21		23	24	25	26	27	28	29	30			33		35	36	37	38			6-1924513-0	KEY "J"
	2	3			6	7	8				12	13	14	15	16	17	18	19	20	21		23	24	25	26	27		29	30			33		35	36	37				5-1924513-9	KEY "J"
																	18			21		23		25	26	27	28	29	30					35			38			5-1924513-8	KEY "J"
																	18			21		23	24	25	26	27	28	29	30			33		35			38			5-1924513-7	KEY "J"
																	18			21		23	24	25	26	27	28	29	30	31		33		35			38			5-1924513-6	KEY "J"
																	18			21		23		25	26	27		29	30					35						5-1924513-5	KEY "J"
																	18			21		23	24	25	26	27		29	30			33		35						5-1924513-4	KEY "J"
																	18			21		23	24	25	26	27		29	30	31		33		35						5-1924513-3	KEY "J"
	2																18			21		23	24	25	26	27	28	29	30			33		35			38			5-1924513-2	KEY "J"
																									26	27	28					33	34							5-1924513-1	KEY "J"
																									26	27						33	34							5-1924513-0	KEY "J"
																											28													4-1924513-9	KEY "J"
		3	4	5	6							13	14	15	16					21	22	23	24									33		35	36	37	38	39		2138987-2	KEY "G"
																																								2138987-1	KEY "G"

TERMINAL HOLE POSITION

CAVITIES WITH A NUMERIC SYMBOL INDICATE
CLOSED TERMINAL HOLE POSITIONS
BLANK CAVITIES INDICATE
OPEN TERMINAL HOLE POSITIONS

4805 (3/13)

THIS DRAWING IS A CONTROLLED DOCUMENT.

DIMENSIONS: mm

TOLERANCES UNLESS OTHERWISE SPECIFIED:
0 PLC ±-
1 PLC ±0.3
2 PLC ±0.10
3 PLC ±-
4 PLC ±-
ANGLES ±1°

MATERIAL: SEE CHART ON SHEET 2

FINISH: - / -

DWN M. FORISKA 19APR2002
CHK M. FORISKA 19APR2002
APVD A. VALASEK 19APR2002

PRODUCT SPEC: -
APPLICATION SPEC: -
WEIGHT: -

TE Connectivity

NAME: 40 WAY ARM, PLUG ASSEMBLY WITHOUT SHORTING BARS, CUSTOMER SPEC.

SIZE A1 | CAGE CODE 00779 | DRAWING NO C-8-1419157-7 | RESTRICTED TO

CUSTOMER DRAWING | SCALE 3:1 | SHEET 5 OF 5 | REV CK