MODEL NO.	PACKAGING
145-0701-212	ONE PCS PER BAG

REV	ECO	DATE
001	ECO-19-0022	06/26/2019

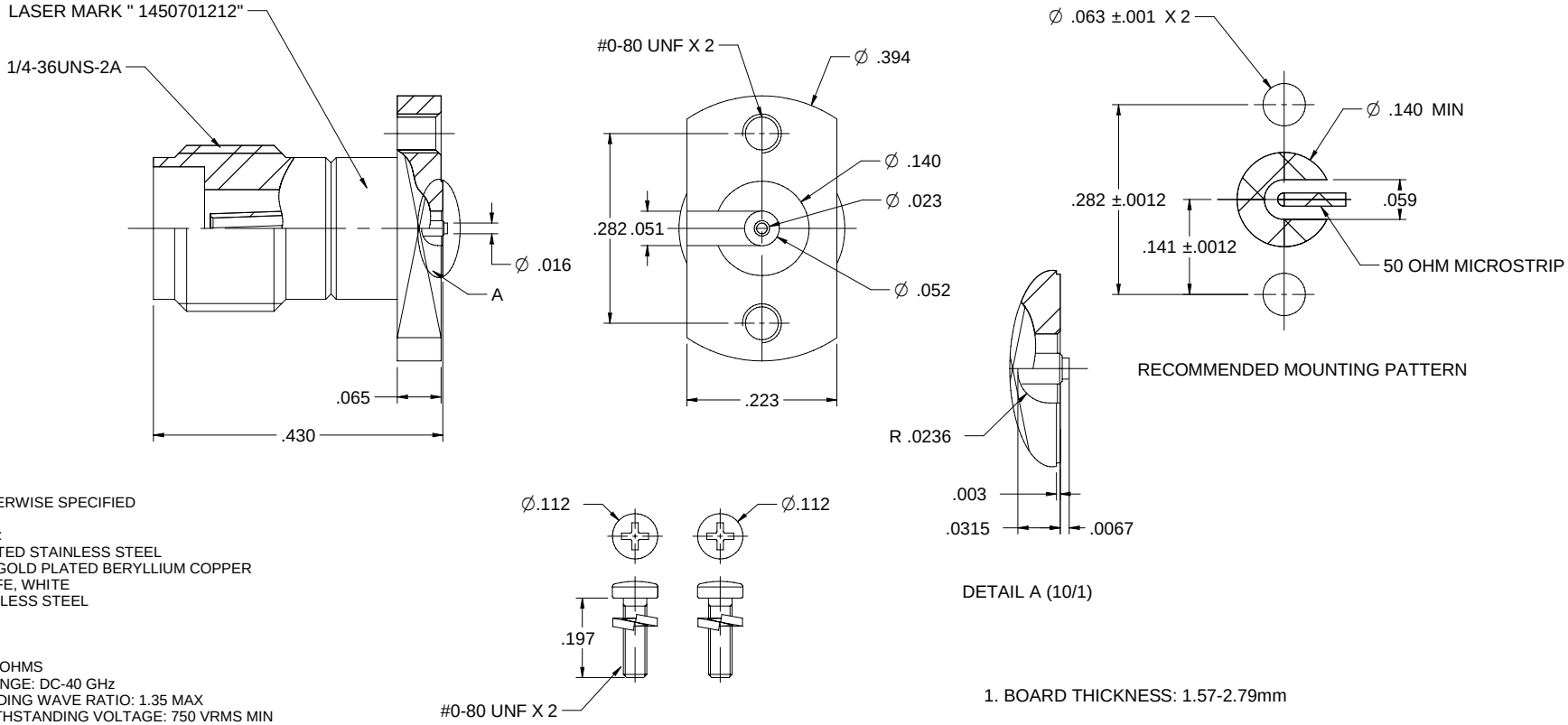

NOTES: UNLESS OTHERWISE SPECIFIED

1. MATERIAL & FINISH:
   1.1 BODY: PASSIVATED STAINLESS STEEL
   1.2 CONTACT PIN: GOLD PLATED BERYLLIUM COPPER
   1.3 INSULATOR: PTFE, WHITE
   1.4 WASHER: STAINLESS STEEL
   1.5 BOLT: SUS302

2. ELECTRICAL:
   2.1 IMPEDANCE: 50 OHMS
   2.2 FREQUENCY RANGE: DC-40 GHz
   2.3 VOLTAGE STANDING WAVE RATIO: 1.35 MAX
   2.4 DIELECTRIC WITHSTANDING VOLTAGE: 750 VRMS MIN
   2.5 CONTACT RESISTANCE:
      2.5.1 CENTER CONTACT: 3 MILLIOHMS MAX
      2.5.2 OUTER CONTACT: 2 MILLIOHMS MAX
   2.6 INSULATOR RESISTANCE: 5000 MEGOHM MIN

3. MECHANICAL:
   3.1 ENGAGEMENT AND DISENGAGEMENT FORCE: 0.23 MN MAX
   3.2 CONTACT RETENTION: 22 N MIN
   3.3 DURABILITY: 500CYCLES MIN

4. ENVIRONMENT:
   4.1 OPERATING TEMPERATURE: -55 TO 125°C
   4.2 THERMAL SHOCK: MIL-STD-202, METHOD 107, CONDITION B.
   4.3 SHOCK: MIL-STD-202, METHOD 213, CONDITION I
   4.4 VIBRATION: MIL-STD-202, METHOD 204, CONDITION D
   4.5 MOISTURE RESISTANCE: MIL-STD-202, METHOD 106
   4.6 SALT SPRAY: MIL-STD-202, METHOD 101, CONDITION B

1. BOARD THICKNESS: 1.57-2.79mm

cinch	Model No. 145-0701-211/220		Johnson
	RoHS2 ☑ 2011/65/EU	Cage Code	Title: JACK, PCB, COMPRESSION MOUNT,SIDE GROOVE,2.92mm (SMK)
	UNLESS OTHERWISE SPECIFIED UNITS: INCH	3RD ANGLE PROJECTION	Drawing No. 145-0701-211/220 — Rev. 001
	.XXX ±.02 .XXXX ±.01 ANGLES ±5°	Drawn By: Betty.Yu	
		Date: 06/26/2019	Size C — DO NOT SCALE DRAWING — Workmanship Std NONE — Sheet 1 of 1

This PROPRIETARY Document is property of Cinch Connectivity Solutions. Information, ideas, and designs, and the understanding that it is our intellectual property, is offered in confidence. Reproduction prohibited.
INTERPRETATION OF DRAWING IS ACCORDANCE WITH ASME Y14.5-2009.