NOTA	SPECIFICATIONS
1	CONNECTEUR DOIT ETRE CONFORME AU CDC :96 238 404 99 *FEMALE CONNECTOR ACCORDING TO SPECIFICATION PSA :96 238 404 99*
2	CONNECTEUR SUIVANT: *FEMALE CONNECTOR ACCORDING TO* -CLASSE DE TEMPERATURE T3 SELON B217050 REV A *TEMPERATURE CLASS T3 ACCORDING TO B217050 REV A* -CLASSE DE VIBRATION MOTEUR SELON B217050 REV A *ENGINE VIBRATOR CLASS ACCORDING TO B217050 REV A* -CLASSE ETANCHEITE 2 SELON B217050 REV A *SEALING CLASS 2 ACCORDING TO B217050 REV A*
3	PRECONISATION D'UTILISATION /*USER MANUAL* REF FCI: PU 071/*FCI'S REFERENCE: PU 071* REF PSA:96 556 834 99/*PSA'S REFERENCE:96 556 834 99*
4	ALVEOLE SUIVANT STE: 96 288 230 99 *CAVITY ACCORDING TO: STE: 96 288 230 99*
5	CONNECTEUR ET POSITION ALVEOLE CONFORMES AU PLAN D'INTERFACE 211FT0523 ET STE 96 339 622 99 *FEMALE CONNECTOR AND CAVITY'S POSITION ACCORDING TO: DRAWING INTERFACE 211FT0523 ET STE 96 339 622 99*
6	CONDUCTEUR SUIVANT STE :96 418 794 99 *WIRE ACCORDING TO: STE :96 418 794 99*
7	CONDITIONNEMENT SUIVANT NORME: E73 03 150G *PACKAGING ACCORDING TO STANDARD: E73 03 150G*
8	DIAMETRE DE L'ISOLANT DES FILS *WIRE INSULATION DIAMETER* :MINI=1.40 :MAXI=2.80
9	MASSE DU PRODUIT LIVRABLE :5g *DELIVERY CONNECTOR WEIGHT : 5g*
10	CHARNIERE DE PLAQUETTE ARRIERE ABSENTE OU CASSEE ADMISE *NO WAFER HINGE OR WAFER HINGE BROKEN ALLOWED*
11	DEFAUTS D'ASPECT SUR ZONES NON FONCTIONNELLES ADMIS *VISUAL DEFECTS ON NO FUNCTIONNAL AREAS ALLOWED*

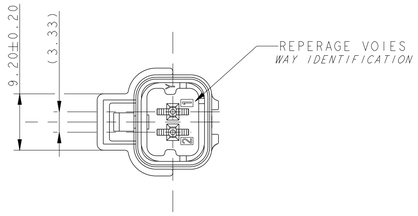

COUPE C-C

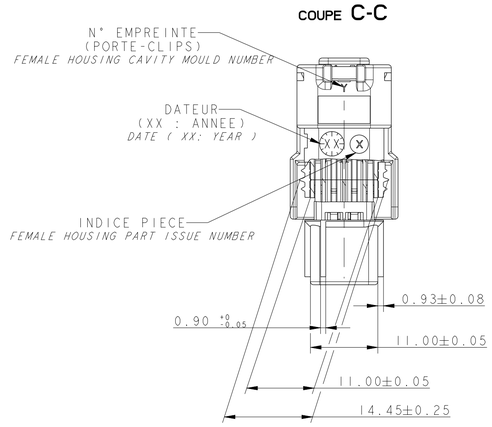

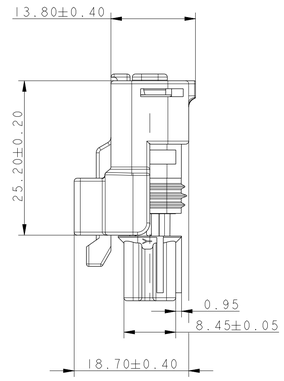

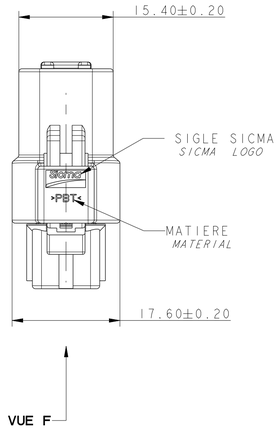

COUPE B-B

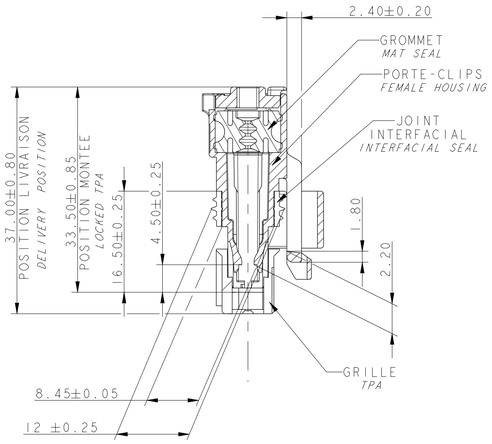

PORTE-CLIPS *FEMALE HOUSING*	211 1 0 073	PBT NON CHARGE *PBT: 0% GF*	NOIR *BLACK*
GRILLE *TPA*	211 M 0 100	PBT: 15% FV *PBT: 15% GF*	NOIR *BLACK*
	211 M 1 100		MARRON *BRUN*
	211 M 2 100		ROUGE *RED*
	211 M 3 100		ORANGE *ORANGE*
	211 M 4 100		JAUNE *YELLOW*
	211 M 5 100		VERT *GREEN*
	211 M 6 100		BLEU *BLUE*
	211 M 8 100		GRIS *GREY*
	211 M 9 100		BLANC *WHITE*
GROMMET *MAT SEAL*	211 M 108	SILICONE 30Sh AUTOLUBRIFIE	VERT *GREEN*
JOINT INTERFACIAL *INTERFACIAL SEAL*	211 M 075	SILICONE 30Sh 4% D'HUILE	BLEU *BLUE*
DESIGNATION *DESCRIPTION*	**REF. MVL** *MVL'S REFERENCE*	**MATIERE** *MATERIAL*	**COULEUR** *COLOUR*

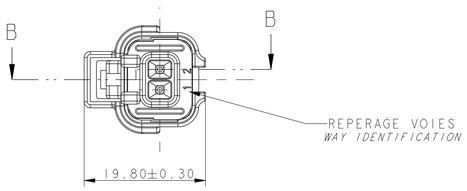

ECHELLE 1:1
SCALE 1:1

CODAGE NOIR REPRESENTE
BLACK CODING DRAW

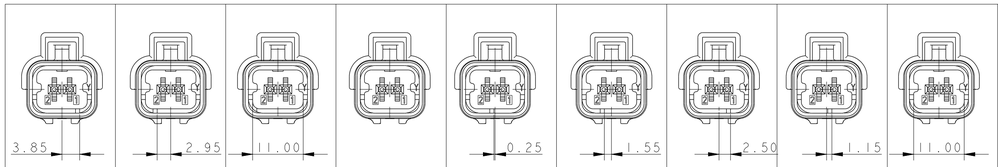

VUE F
VIEW F

Tolérances : ±0.05

NOIR /*BLACK*	MARRON /*BROWN*	ROUGE /*RED*	ORANGE /*ORANGE*	JAUNE/ *YELLOW*	VERT/ *GREEN*	BLEU /*BLUE*	GRIS /*GREY*	BLANC /*WHITE*	COULEUR *COLOUR*	
211 PC 02 2S 0 149	211 PC 02 2S 1 149	211 PC 02 2S 2 149	211 PC 02 2S 3 149	211 PC 02 2S 4 149	211 PC 02 2S 5 149	211 PC 02 2S 6 149	211 PC 02 2S 8 149	211 PC 02 2S 9 149	PART NUMBER	MVL
A	A	A	A	A	A	A	A	A	PART REVISION	MVL
10820158	10820159	10820160	10820161	10820162	10820163	10820164	10820165	10820166	PART NUMBER	DELPHI
01	01	01	01	01	01	01	01	01	PART REVISION	DELPHI

OLD REVISIONS ANCIENNES REVISIONS		
A 06 039	-	-
	-	-
	-	-
	-	-
	-	CREATION
	-	-
	-	-
-	-	-
	-	-
	-	-
-	-	DELPHI P/N ADDED

ECN NO. *NUMERO ECN*	POSITION *POSITION*	CHANGE DESCRIPTION *MODIFICATION*

PRODUCT SPEC. *SPECIF. PRODUIT* -
PACKAGING SPEC. *SPECIF. EMBALAGE* -
APPLICATION SPEC. *SPECIF. APPLICATION* -

COPYRIGHT DELPHI CORPORATION AND/OR ITS AFFILIATES. ALL RIGHTS RESERVED. REVISED
THIS DRAWING IS THE PROPERTY OF DELPHI CORPORATION AND CONTAINS DELPHI CONFIDENTIAL INFORMATION. THE REPRODUCTION, DISTRIBUTION AND UTILIZATION OF THIS DOCUMENT OR ITS RELATED CAD MATH DATA, AS WELL AS COMMUNICATION OF ANY CONTENT TO OTHERS, WITHOUT EXPRESS AUTHORIZATION, IS PROHIBITED...
CE PLAN EST LA PROPRIETE DE DELPHI CORPORATION ET CONTIENT DES INFORMATIONS DELPHI CONFIDENTIELLES. LA REPRODUCTION, LA DISTRIBUTION ET L'UTILISATION DE CE DOCUMENT OU DE SES DONNEES MATHEMATIQUES CAD, AINSI QUE LA COMMUNICATION DE TOUT CONTENU A AUTRUI, SANS AUTORISATION EXPRESSE, EST INTERDITE...

TOLERANCES *TOLERANCES*	±0.1 ±2°	MATERIAL : *MATIERE :* - SEE TABLE
CONTENANT N° *CONTE-YNRIE N°*	SEE TABLE	COLOUR : *COULEUR :* SEE TABLE
DO NOT MEASURE DRAWING *NE PAS PRENDRE DE COTES*		TOOL NO. *OUTIL N°* -

SURFACE FINISH *ETAT DE SURFACE* -
ECO Loc. Code *CODE B.E.* FE

DELPHI PACKARD ELECTRICAL/ELECTRONIC ARCHITECTURE
EPERNON, FRANCE

ISO PROJECTION *PROJECTION ISO*
DIMENSION IN MILLIMETERS *DIMENSIONS EN MILLIMETRES*
CAD SYSTEM pro / eng.
DWG SIZE *FORMAT* A1

	DATE *DATE*	NAME *NOM*
CREATED BY *CREE PAR*	2006-09-19	JEANDET
MODIFIED BY *MODIF. PAR*	2013/03/19	F FAURIE
CHECKED BY *VERIF. PAR*	2013/03/20	Pascal MENARD
APPROVED BY *APPR. PAR*	2013/03/21	F LAVERTU

TITLE *DESIGNATION* **2-WAY 15x0.8 FEMALE CONNECTOR**
PROJECT *PROJET* **MINI SEALED "NM" FAMILY**
ESR NO. *NUMERO ESR* FRA-0102 | CAT. NO. *NUMERO CAT.* 211PC022SX149
DOCUMENT UNDER PDS CONTROL *DOCUMENT SOUS P.D.S.*
NO MODIFICATION ALLOWED OUTSIDE *PAS DE MODIFICATION EN DEHORS*

DRAWING NUMBER *REF. PLAN* **211FT0525** REV. *IND.* **B**
STATE *ETAT* **SERIAL RELEASED**
PART NUMBER *REF. ARTICLE* **See Table** REV. *IND.* -
APPROVAL LEVEL *NIV. D'APPROBATION* -
SHEET *FEUILLE* 1 of 1 *sur* 1
SCALE *ECH.* 1:1
FILE NAME *NOM DE FICHIER* 211FT0525

EUR C04 112 F29