Autodesk

UNIT	mm

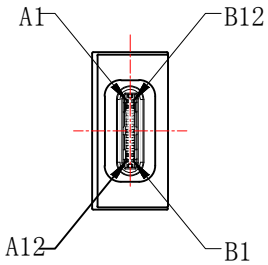

USB Type C Male

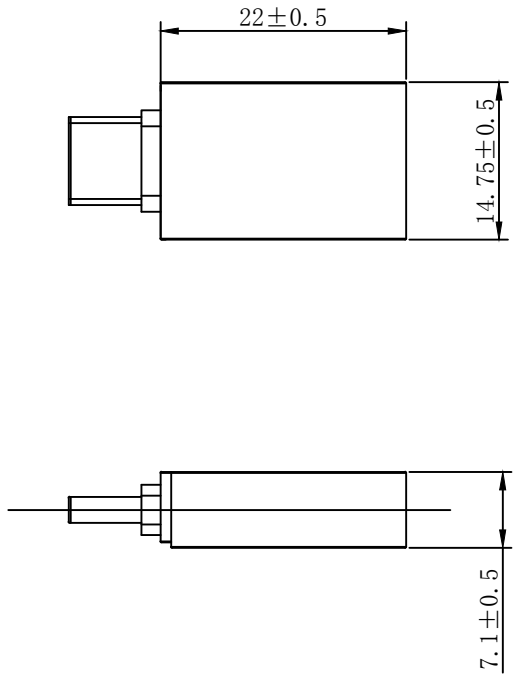

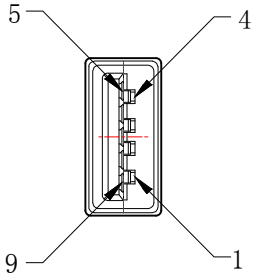

USB 3.0 A Female

PIN OUT

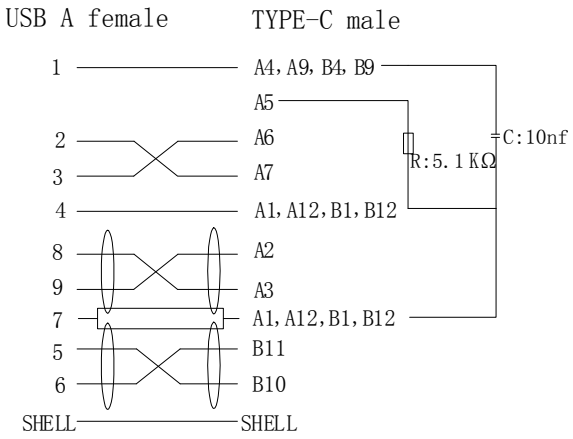

NOTES:

1. Electrical test:
   (1). 100% open short & miss wire test;
   (2). Insulation resistance: DC 300V 10MΩ Min;
   (3). Contactor resistance: 3Ω Max;
   USB 3.2 GEN1 Type C male input, A female output
   Data Transfer: 5Gbps Voltages: 5V Current: 3A
   RoHS 2.0 and REACH Compliant

MATERIAL LIST:

NO.	PARTS NAME	SPECIFICATION STANDARD	QT'Y	REMARK
③	Housing	Aluminium Shell Black	1	
②	Connector	USB 3.0 A Female, Blue insulation The Pin Gold Plating, the Shell For Nickel plating	1	
①	Connector	USB Type C male, Black insulation The Pin Gold Plating, the Shell For Nickel plating	1	

Item No.:	12.03.2997
DESC.	ROLINE USB 3.2 Adapter, A-C, F/M, black

BY	CHK	REVISION RECORD MODIFICATIONS	DATE	REV.
		NEW	2019-06-17	A

SECOMP

Autodesk