REFERENCE DRAWING

REV.	ECN.NO.	MODIFY.CONTENT	DATE
X1		NEW RELEASE	07/04/17

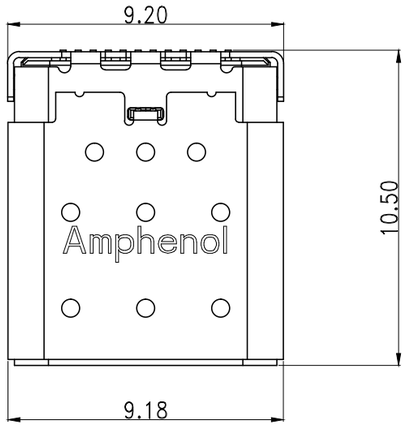

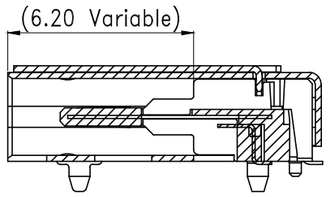

SECTION H-H

Circuit Mapping Table:

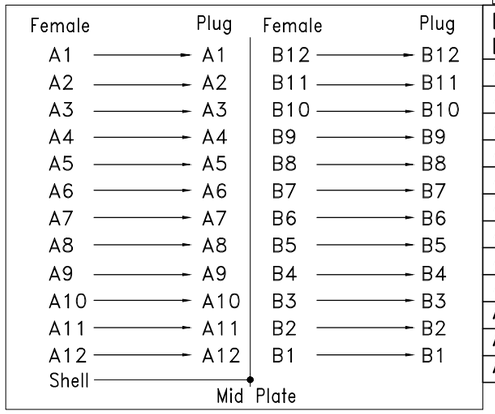

Pin No	Signal Name	Mating Sequence	Pin No	Signal Name	Mating Sequence
A1	GND	First	B12	GND	First
A2	TX1+	Second	B11	RX1+	Second
A3	TX1−	Second	B10	RX1−	Second
A4	VBUS	First	B9	VBUS	First
A5	CC1	Second	B8	SBU2	Second
A6	D+	Second	B7	D−	Second
A7	D−	Second	B6	D+	Second
A8	SBU1	Second	B5	CC2	Second
A9	VBUS	First	B4	VBUS	First
A10	RX2−	Second	B3	TX2−	Second
A11	RX2+	Second	B2	TX2+	Second
A12	GND	First	B1	GND	First

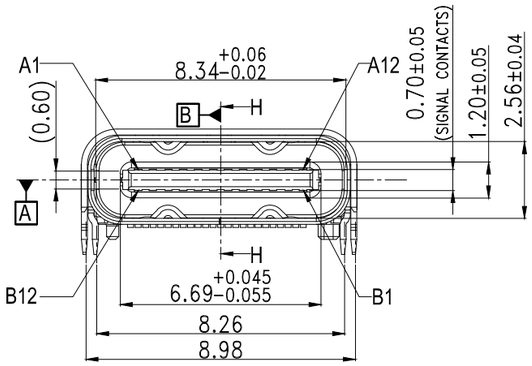

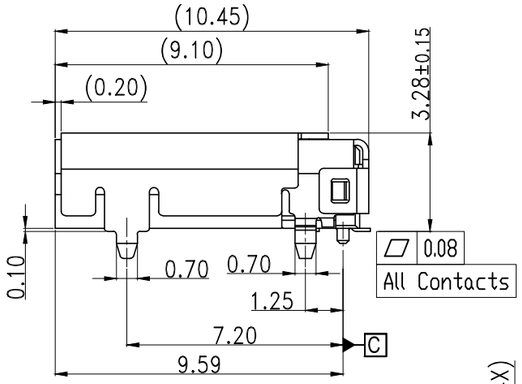

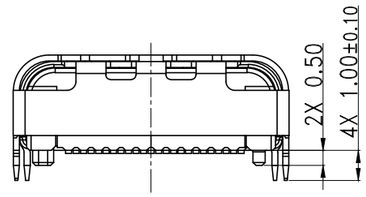

Notes:
1,Material :
Contacts : copper alloy
Shell : Stainless steel.
Housing : High-temperature polymer UL94V-0, black.
2,Plating :
Contacts: contact area 30u" Au, Solder tail gold flash or matte tin, nickel overall.
Shell : Nickel Plating
3.Coplanarity : 0.08Max.
4.Packaging type: carrier tape.
5.Material should be fulfilled Amphenol spec# SSN002 AND Customer Requirements,for halogen free products, also need to meet SSN004

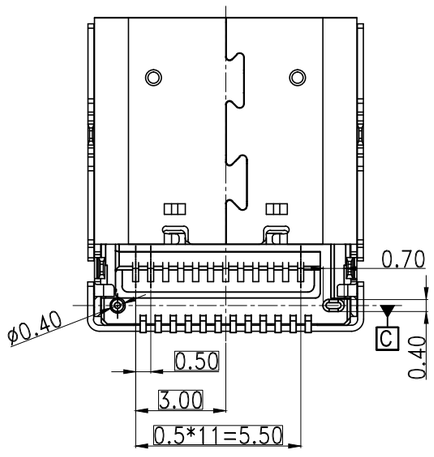

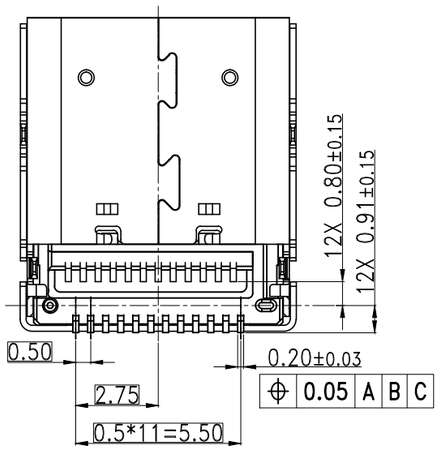

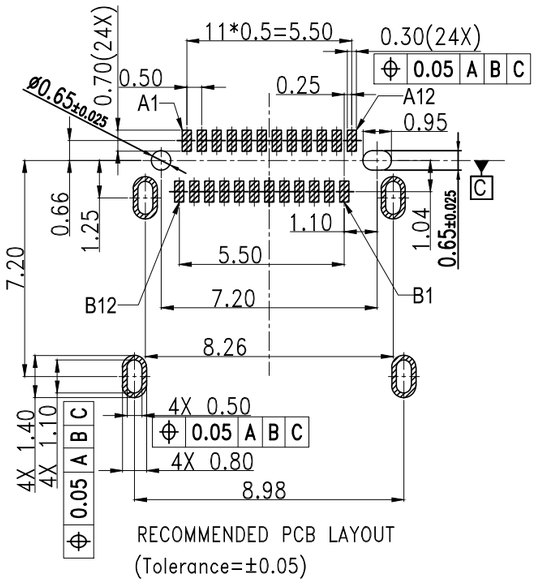

RECOMMENDED PCB LAYOUT
(Tolerance=±0.05)

GENERAL	TOLERANCE	FILE.NO.	12401849E402A	PART.NO.	12401849E402A	DRAWN	Allan.Lai	MATERIAL		SCALE	1:1
x.±0.50	x.°± 5°	REV.	X1	TITLE	USB TYPE C CONNECTOR	CHECKED	Weison.lu	DATE	07/04/17	UNIT	mm
.x±0.38	.x°± 2°	SIZE									
.xx±0.25	.xx± 1°	A4		SHEET	1 OF 1	APPROVED	Tom	Amphenol Shouhmin Industry			