Please register on the website to download drawings without a watermark

sales@trfastenings.com
www.trfastenings.com

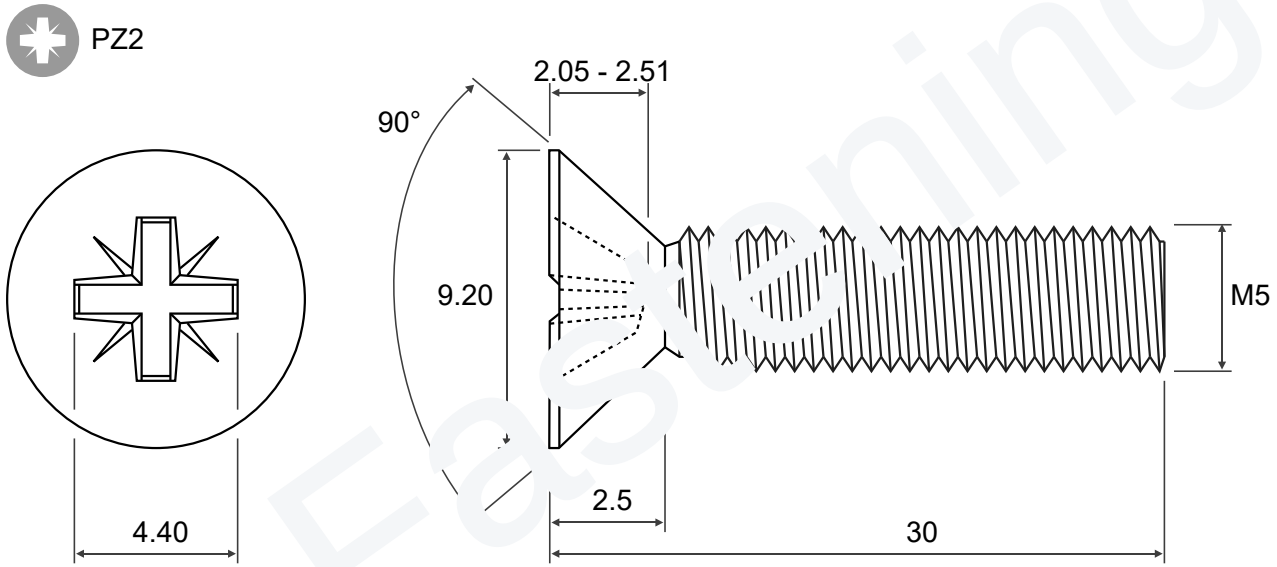

M5 x 30mm Countersunk Head PoziDriv® Machine Screw DIN 965Z ~ISO 7046	Material	A2 Stainless Steel	Customer Part No.	
	Finish	Self Colour	Web Ref No	TR00008256-000

© TR FASTENINGS LTD. 2023 THIS DRAWING IS THE PROPERTY OF TR FASTENINGS AND IS SUPPLIED IN CONFIDENCE, AND MAY NOT WHOLLY OR PARTIALLY BE COPIED, WITHOUT THE EXPRESSED AUTHORISATION OF TR FASTENINGS LTD.

UNCONTROLLED COPY

UNLESS OTHERWISE SPECIFIED : DIMENSIONS ARE IN MILLIMETERS