Adaptor

Specifications:

Bodies : Brass per JIS-C3604
Centre Contact : Brass per JIS-C3604
Beryllium copper per ASTM B196 UNS C17300
Insulation : PTFE per ASTM D1457 and ASTM D1710
Connector interface per MIL-STD-348A
Part to be clean and free of burrs
Centre contact shall be anti-rotational

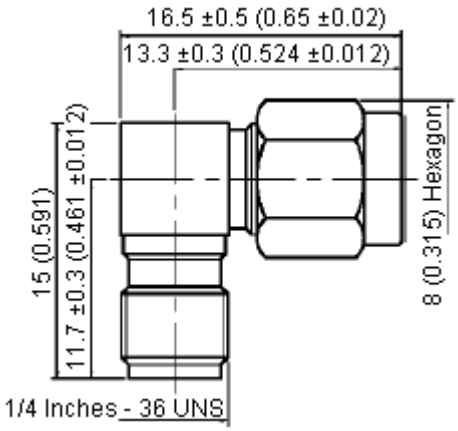

Dimensions : Millimetres (Inches)

Specification Table

Number	Description	Material	Finish	Part Number
1	Cap	Brass	Gold 3 µ Inches Minimum	19-20-TGG
2	Body I			
3	Centre Contact		Gold 50 µ Inches Minimum	
4	Body II		Gold 3 µ Inches Minimum	
5	Insulation I	PTFE	None	
6	Washer	Stainless Steel		
7	Gasket	Silicone	Red	
8	Shell	Brass	Gold 3 µ Inches Minimum	
9	Centre Contact II	Beryllium Copper	Gold 50 µ Inches Minimum	
10	Insulation II	PTFE	None	

Important Notice : This data sheet and its contents (the "Information") belong to the members of the Premier Farnell group of companies (the "Group") or are licensed to it. No licence is granted for the use of it other than for information purposes in connection with the products to which it relates. No licence of any intellectual property rights is granted. The Information is subject to change without notice and replaces all data sheets previously supplied. The Information supplied is believed to be accurate but the Group assumes no responsibility for its accuracy or completeness, any error in or omission from it or for any use made of it. Users of this data sheet should check for themselves the Information and the suitability of the products for their purpose and not make any assumptions based on information included or omitted. Liability for loss or damage resulting from any reliance on the Information or use of it (including liability resulting from negligence or where the Group was aware of the possibility of such loss or damage arising) is excluded. This will not operate to limit or restrict the Group's liability for death or personal injury resulting from its negligence. Multicomp is the registered trademark of the Group. © Premier Farnell plc 2012.