MICRO SWITCH
A DIVISION OF MINNEAPOLIS-HONEYWELL REGULATOR COMPANY
FREEPORT, ILLINOIS
FED. MFR. CODE 91929

ACTUATOR-SWITCH

CATALOG LISTING
JV-82
FAA-PMA

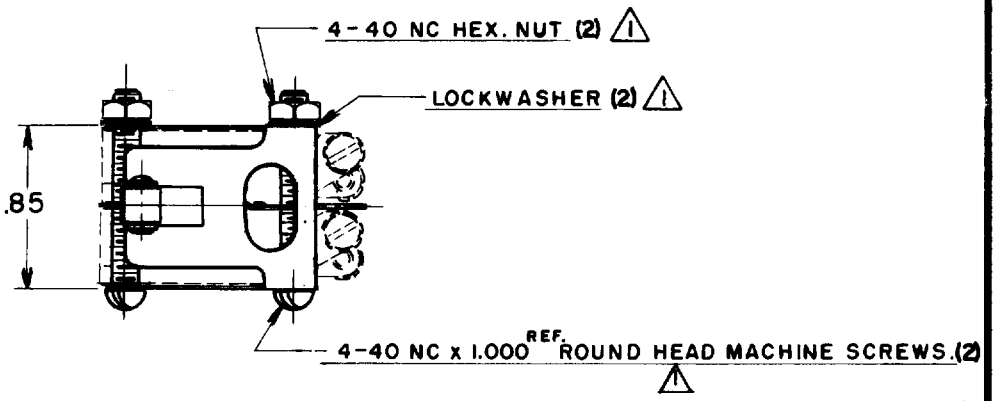

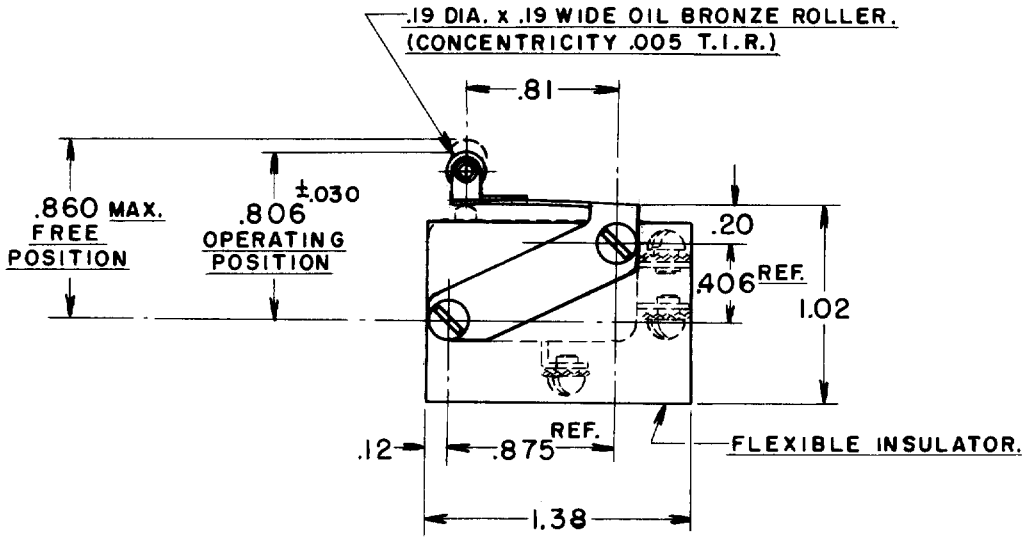

NOTES
⚠1 FURNISHED UNASSEMBLED
2- SWITCHES DO NOT NECESSARILY OPERATE SIMULTANEOUSLY
3 - MARKING ON INDIVIDUAL PACKAGES OF ACTUATORS SHALL INCLUDE FAA-PMA

THIS DRAWING COVERS A PROPRIETARY ITEM AND IS THE PROPERTY OF MICRO SWITCH, A DIVISION OF HONEYWELL. THIS DRAWING IS NOT TO BE COPIED OR USED WITHOUT THE APPROVAL OF MICRO SWITCH.

CHARACTERISTICS WITH (2)V3-1 BASIC SWITCH INSTALLED	ELECTRICAL DATA	
OPERATING FORCE — — — — 28 OZ. MAX.	CONTACT ARRANGEMENT	BREAK DISTANCE
RELEASE FORCE — — — — — 10 OZ. MIN.		
OVERTRAVEL — — — — — — — .035 MIN.		

SCALE FULL
DO NOT SCALE PRINT
UNLESS OTHERWISE SPECIFIED
DIMENSIONS ARE IN INCHES
TOLERANCES ARE:

ONE PLACE	(.0)	±.030
TWO PLACE	(.00)	±.015
THREE PLACE	(.000)	±.005
ANGLES		±

WEIGHT

DRAWN	R. G. C.	12, AUG. '57
CHECK	GCH	21 MAY 59
CHECK	BLS	13 AUG 57
CHECK		

FORMTEK
FO-50378

DRAWING NUMBER: M JV-82 PAGE 1 OF 1
RELEASE NO. SR 8233
REPLACES
ISSUE 7

REVISIONS

A	WAS X15674	RLH 15 MAY 59
B	C013972	AFP 20 AUG 59
C	CO-27609	MJB 22 JUN 70
D	C034626	RER 7 FEB 75
E	C074163	DHD 22 APR 93
F	C093327	DLT 2 DEC 98