19.6mm X 68.2mm WATER RESISTANT LED MODULES

FEATURES

VOLTAGE: 12V DC PER MODULE

CURRENT: 45mA PER MODULE

LED VIEWING ANGLE (2 θ 1/2): 120°

MODULE THICKNESS: 5.7mm

PACKAGE: 20 PIECES PER REEL

WATER RESISTANCE

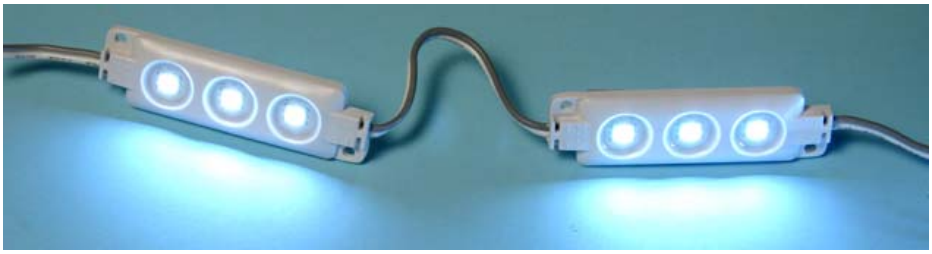

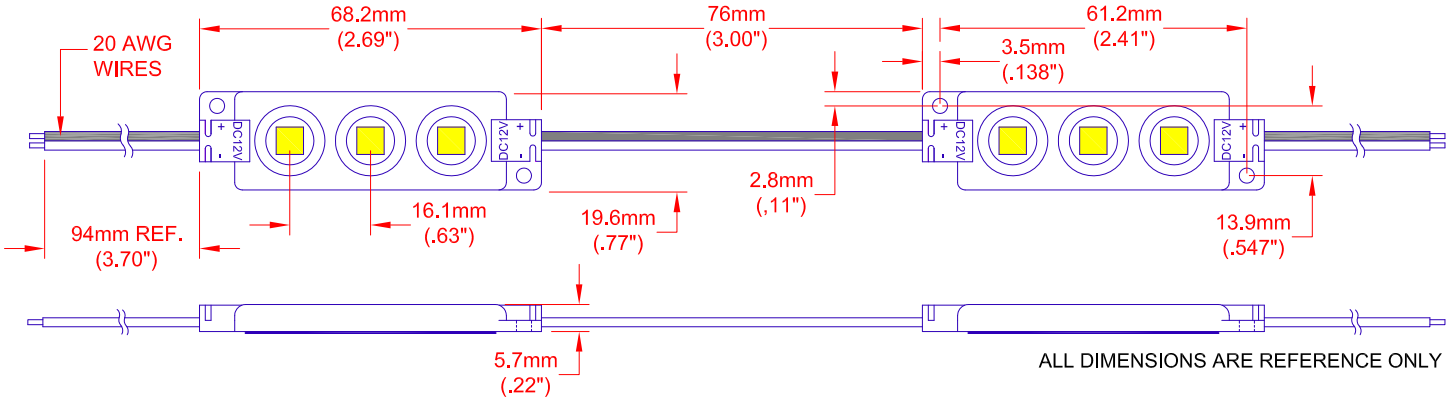

ALL DIMENSIONS ARE REFERENCE ONLY

JKL PART NO.: ZM-1968-WW (WARM WHITE)

Absolute Maximum Rating at TA = 25ºC

Parameter	Symbol	Absolute MAX. Rating	Unit
Forward Current	IF	45	mA
Power Dissipation	PD	0.54	W
Electrostatic Discharge	ESD	800	V
Operating Temperature	Topr	-20~+40	ºC
Storage Temperature	Tstg	-25~+60	ºC

Electrical/Optical Characteristics at TA = 25ºC

Parameter	Symbol	Condition	Min	Typ	Max	Unit
Forward Voltage DC	VF	IF = 45mA	- -	12	- -	V
Color Temperature	TC	IF = 45mA		3000		K
Luminous Flux per Module	φV/Mod	IF = 45mA	- -	35	- -	lm/mod
Luminous Flux per Ft.	φV/Ft	- -	- -	75	- -	lm/ft
Recommend Forward Current	IF(rec)	- -	- -	45	- -	mA

JKL PART NO.: ZM-1968-CW (COOL WHITE)

Electrical/Optical Characteristics at TA = 25ºC

Parameter	Symbol	Condition	Min	Typ	Max	Unit
Forward Voltage DC	VF	IF = 45mA	- -	12	- -	V
Color Temperature	TC	IF = 45mA		6000		K
Luminous Flux per Module	φV/Mod	IF = 45mA	- -	43	- -	lm/mod
Luminous Flux per Ft.	φV/Ft	- -	- -	90	- -	lm/ft
Recommend Forward Current	IF(rec)	- -	- -	45	- -	mA

NOTES:

1. STANDARD MOUNTING INCLUDES ADHESIVE BACKING AND MOUNTING TABS FOR A #6 SCREW (SCREWS NOT INCLUDED).
2. JKL ACCESSORIES TO BE ORDERED SEPARATELY: ZPS-1235 OR ZPS-1260 POWER SUPPLIES.
3. DUE TO WIRE GAUGE USED IN THE CONSTRUCTION OF THE MODULES SERIAL RUNS SHOULD BE LIMITED TO 38 FEET OR 80 MODULES.
4. POWER CONSUMPTION 1 WATTS PER FOOT.

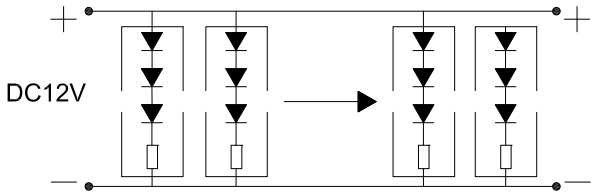

PLEASE REFER TO JKL APPLICATION SHEET: JKL-AS-ZM-CHANNEL-LED FOR INSTALLATION AND POWER RECOMMENDATIONS.

ATTENTION

OBSERVE PRECAUTION FOR HANDLING ELECTROSTATIC DISCHARGE SENSITIVE DEVICES

REV. NO.	DESCRIPTION/ECO NUMBER	APPV'D DATE
A	ADDED DIMENSIONS FOR MOUNTING HOLES	11/22/12
	RELEASED	2/14/12

METRIC — THIRD ANGLE PROJECTION

DIMENSIONS ARE IN mm & (INCHES)

TOLERANCE UNLESS OTHERWISE SPECIFIED: 1 PL +/- REF. 2 PL +/- ANGLE +/-

JKL COMPONENTS CORPORATION

TITLE: WHITE 3-LED CHANNEL LIGHT

DRAWN BY	APPV'D BY	DATE	SIZE	FSCM NO.	DRAWING NO.
L. WENGSTROM	L.R.	11/20/12	A	55335	ZM-1968 MULTI

- CAD DRAWING - MANUAL REVISIONS NOT PERMITTED

SCALE	RELEASED DATE	REVISION DATE	REV. NO.	SHEET
NONE	2/14/12	11/20/12	A	1 OF 1