DESCRIPTION: M12 MALE - BOARD MOUNT - 8 POS.

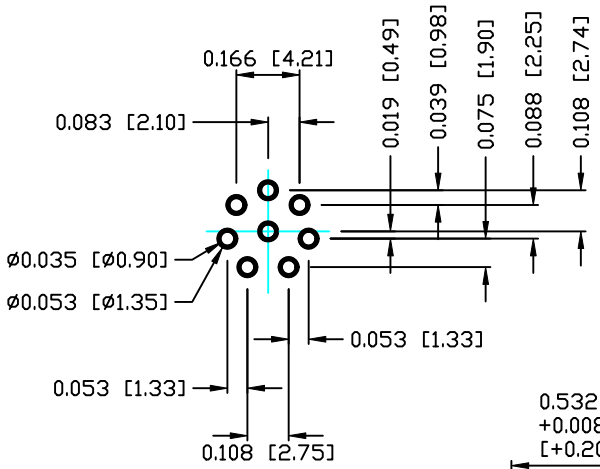

PCB LAYOUT

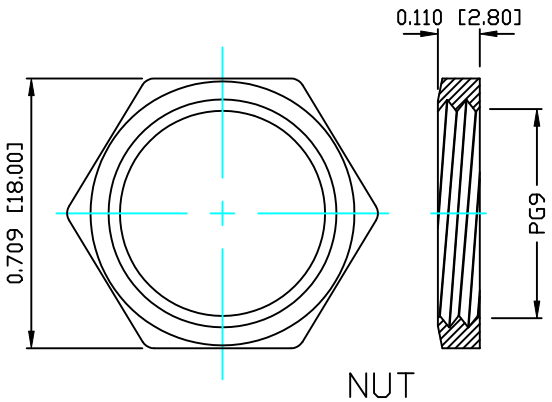

NUT

NOTE:

MATERIAL	
HOUSING:	PBT UL94V-0, BLACK
CONTACT:	BRASS
SHELL	BRASS
NUT:	BRASS
O-RING:	EPDM, BLACK
FINISH	
CONTACT:	GOLD 10µ" MIN. OVER 50µ" NICKEL
SHELL:	NICKEL PLATED
NUT	NICKEL PLATED
ELECTRICAL:	
RATED CURRENT:	5A
RATED VOLTAGE:	125V
WATER PROOF:	IP67
ENVIRONMENT:	
OPERATIION TEMPERATURE:	-40°C TO +80°C

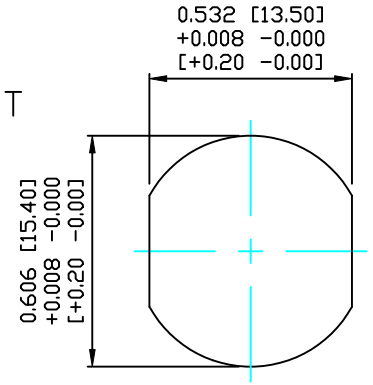

PANEL CUTOUT

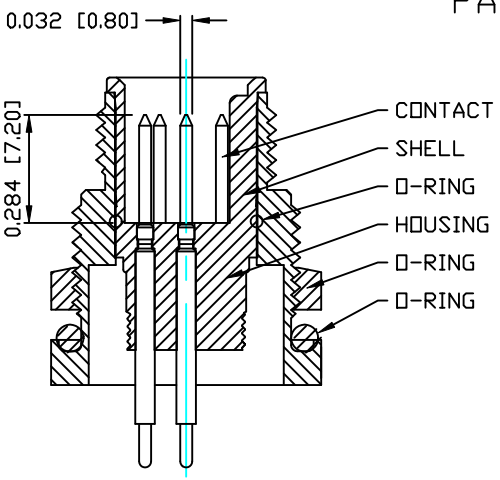

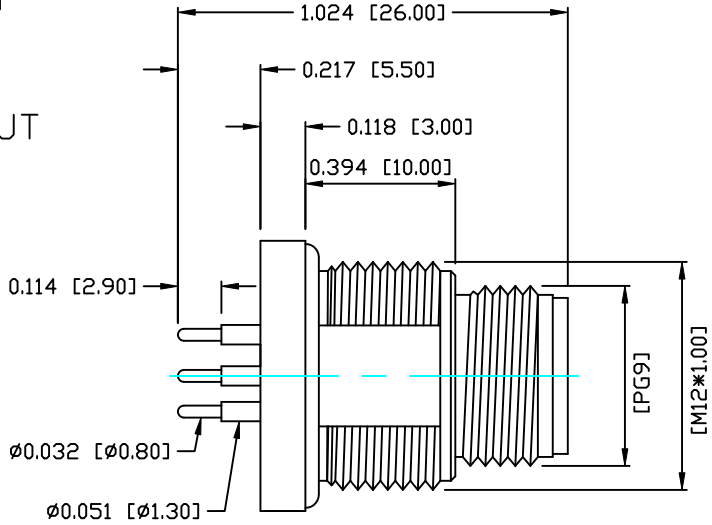

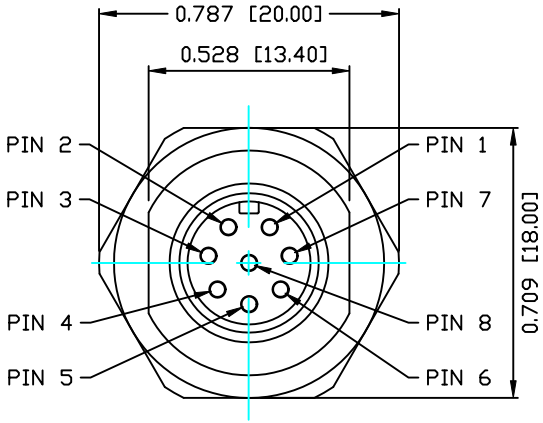

RoHS COMPLIANT

DO NOT SCALE FROM DRAWING

THESE DRAWINGS AND SPECIFICATIONS ARE THE PROPERTY OF NorComp AND SHALL NOT BE REPRODUCED, COPIED OR USED AS THE BASIS FOR THE MANUFACTURE OR SALE OF APPARATUS WITHOUT WRITTEN PERMISSION.

DRAWN: C. SMITH	DATE: 09-05-14	NorComp	SCALE: N.T.S.	SHEET 1 OF 1	REV 1
CHECKED:	DATE:		DWG NO. 860-008-113R004		