CY4541 EZ-PD™ CCG4 Evaluation Kit Guide

Doc. No. 002-10353 Rev. *E

Cypress Semiconductor
198 Champion Court
San Jose, CA 95134-1709
www.cypress.com

© Cypress Semiconductor Corporation, 2016-2017. This document is the property of Cypress Semiconductor Corporation and its subsidiaries, including Spansion LLC (“Cypress”). This document, including any software or firmware included or referenced in this document (“Software”), is owned by Cypress under the intellectual property laws and treaties of the United States and other countries worldwide. Cypress reserves all rights under such laws and treaties and does not, except as specifically stated in this paragraph, grant any license under its patents, copyrights, trademarks, or other intellectual property rights. If the Software is not accompanied by a license agreement and you do not otherwise have a written agreement with Cypress governing the use of the Software, then Cypress hereby grants you a personal, non-exclusive, nontransferable license (without the right to sublicense) (1) under its copyright rights in the Software (a) for Software provided in source code form, to modify and reproduce the Software solely for use with Cypress hardware products, only internally within your organization, and (b) to distribute the Software in binary code form externally to end users (either directly or indirectly through resellers and distributors), solely for use on Cypress hardware product units, and (2) under those claims of Cypress’s patents that are infringed by the Software (as provided by Cypress, unmodified) to make, use, distribute, and import the Software solely for use with Cypress hardware products. Any other use, reproduction, modification, translation, or compilation of the Software is prohibited.

TO THE EXTENT PERMITTED BY APPLICABLE LAW, CYPRESS MAKES NO WARRANTY OF ANY KIND, EXPRESS OR IMPLIED, WITH REGARD TO THIS DOCUMENT OR ANY SOFTWARE OR ACCOMPANYING HARDWARE, INCLUDING, BUT NOT LIMITED TO, THE IMPLIED WARRANTIES OF MERCHANTABILITY AND FITNESS FOR A PARTICULAR PURPOSE. To the extent permitted by applicable law, Cypress reserves the right to make changes to this document without further notice. Cypress does not assume any liability arising out of the application or use of any product or circuit described in this document. Any information provided in this document, including any sample design information or programming code, is provided only for reference purposes. It is the responsibility of the user of this document to properly design, program, and test the functionality and safety of any application made of this information and any resulting product. Cypress products are not designed, intended, or authorized for use as critical components in systems designed or intended for the operation of weapons, weapons systems, nuclear installations, life-support devices or systems, other medical devices or systems (including resuscitation equipment and surgical implants), pollution control or hazardous substances management, or other uses where the failure of the device or system could cause personal injury, death, or property damage (“Unintended Uses”). A critical component is any component of a device or system whose failure to perform can be reasonably expected to cause the failure of the device or system, or to affect its safety or effectiveness. Cypress is not liable, in whole or in part, and you shall and hereby do release Cypress from any claim, damage, or other liability arising from or related to all Unintended Uses of Cypress products. You shall indemnify and hold Cypress harmless from and against all claims, costs, damages, and other liabilities, including claims for personal injury or death, arising from or related to any Unintended Uses of Cypress products.

Cypress, the Cypress logo, Spansion, the Spansion logo, and combinations thereof, WICED, PSoC, CapSense, EZ-USB, F-RAM, and Traveo are trademarks or registered trademarks of Cypress in the United States and other countries. For a more complete list of Cypress trademarks, visit cypress.com. Other names and brands may be claimed as property of their respective owners.

.

Contents

CY4541 EZ-PD™ CCG4 Evaluation Kit Guide 1

Contents 3

1. Safety Information 5

1.1 Regulatory Compliance 5
1.2 General Safety Instructions 6
1.2.1 ESD Protection 6
1.2.2 Handling Boards 6

2. Introduction 7

2.1 Kit Contents 7
2.1.1 Hardware Not Included With the Kit 7
2.2 Getting Started 8
2.3 List of Recommended Hardware 8

3. Kit Installation 9

3.1 CY4541 EZ-PD CCG4 EVK Kit Software Installation 9

4. CY4541 EZ-PD CCG4 EVK Hardware 13

4.1 CY4541 EZ-PD CCG4 EVK Architecture 13
4.2 CY4541 EZ-PD CCG4 EVK 14
4.3 CCG EVK Base Board 14
4.3.1 Block Diagram 14
4.3.2 Features 15
4.3.3 Connectors and Jumper Settings 16
4.4 CY4541 CCG4 Daughter Card 18
4.4.1 Block Diagram 18
4.4.2 Features 19
4.4.3 Connectors and Jumper Settings 20
4.5 CCG EVK Base Board and CCG4 Daughter Card Revisions 22

5. Programming the CCG4 Device 24

5.1 Programming CCG4 Device on the CY4541 CCG4 Daughter Card 24

6. Kit Operation 29

6.1 Power Supply Connections 29
6.1.1 Valid Power Supply Connections 31
6.1.2 Invalid Power Supply Connections 34
6.1.3 Non Recommended Power Supply Connections with Custom Firmware 35

6.2 Dual Role Port (DRP) and SuperSpeed USB Demo 38
6.2.1 Boards, Cables, and Accessories 38
6.2.2 Running the DRP SuperSpeed USB Demo 39
6.2.3 Common Problems and Troubleshooting 44
6.3 DisplayPort Demo 44
6.3.1 Boards, Cables, and Accessories 44
6.3.2 Running the Single DisplayPort Demo 44
6.3.3 Running the Dual DisplayPort Demo 45
6.3.4 Common Problems and Troubleshooting 47

Appendix A: Terminology 48

Appendix B: Schematic and Bill Of Materials 50

B.1 CY4541 CCG4 Base Board Schematic (Rev5* CCG EVK Base board) 50
B.2 CY4541 CCG4 Daughter Card Schematic (Rev 4* CCG4 Daughter Card) 55
B.3 Type-C to Type-A Adapter Schematic 60
B.4 Bill of Materials 61
B.4.1 CCG EVK Base Board BOM (Rev5 CCG EVK Base Board) 61
B.4.2 CY4541 CCG4 Daughter Card BOM (Rev 4 CCG4 Daughter Card) 65
B.4.3 Type-C to Type-A Adapter BOM 69

Revision History 70

Document Revision History 70

1. Safety Information

1.1 Regulatory Compliance

The CY4541 EZ-PD CCG4 EVK is intended for use as a development platform for hardware or software in a laboratory environment. The board is an open-system design, which does not include a shielded enclosure. Due to this reason, the board may cause interference to other electrical or electronic devices in close proximity. In a domestic environment, this product may cause radio interference. In such cases, take adequate preventive measures. Also, do not use this board near any medical equipment or RF devices.

Attaching additional wiring to this product or modifying the product operation from the factory default may affect its performance and cause interference with other apparatus in the immediate vicinity. If such interference is detected, suitable mitigating measures must be taken.

The CY4541 EZ-PD CCG4 EVK as shipped from the factory has been verified to meet with requirements of CE as a Class A product.

	The CY4541 EZ-PD CCG4 EVK contains ESD-sensitive devices. Electrostatic charges readily accumulate on the human body and any equipment, and can discharge without detection. Permanent damage may occur on devices subjected to high-energy discharges. Proper ESD precautions are recommended to avoid performance degradation or loss of functionality. Store unused CY4541 CCG4 EVK boards in the protective shipping package.

	End-of-Life/Product Recycling This kit has an end-of-life cycle of five years from the year of manufacturing mentioned on the back of the box. Contact your nearest recycler for discarding the kit.

1.2 General Safety Instructions

1.2.1 ESD Protection

ESD can damage boards and associated components. Cypress recommends that you perform procedures only at an ESD workstation. If an ESD workstation is not available, use appropriate ESD protection by wearing an antistatic wrist strap attached to the chassis ground (any unpainted metal surface) on the board when handling parts.

1.2.2 Handling Boards

CY4541 EZ-PD CCG4 EVK boards are sensitive to ESD. Hold the board only by its edges. After removing the board from its box, place it on a grounded, static-free surface. Use a conductive foam pad if available. Do not slide the board over any surface.

Any physical action on the CY4541 EZ-PD CCG4 EVK such as changing wires, jumper settings, or measuring voltages can cause stress on the CY4541 printed circuit board assembly (PCBA) and Type-C connectors. You must ensure that the PCBA has proper support on the bottom side to avoid stress on the PCBA when the EVK is in operation.

2. Introduction

The CY4541 EZ-PD™ CCG4 Evaluation Kit (EVK) is based on the Cypress's CCG4 dual port Type-C Power Delivery (PD) controllers. EZ-PD™ CCG4 is a dual USB Type-C controller that complies with the latest USB Type-C and PD standards. This EVK is primarily intended to be a demonstration vehicle for Type-C PC designs that house one or two Type-C ports. CCG4 can act either as a power provider (Source) or as a power consumer (Sink). The kit also helps to evaluate several features on two Type-C ports, using a Dual Role Port (DRP) or SuperSpeed USB demo, and a DisplayPort demo.

2.1 Kit Contents

The CY4541 EZ-PD CCG4 EVK contains the following items:

- Two CCG EVK base boards assembled with one CY4541 CCG4 daughter card
- One 24-V DC power adapter*
- Two USB 3.0 Type-A to Type-B Cables
- Two USB Type-C to Type-A adapters
- One USB 3.0 EMCA (Electronically Marked Cable Assembly) Type-C cable*
- One USB 2.0 Type-A to Mini-B cable
- One set of jumper wires
- One screwdriver
- Quick Start Guide

Note: *The CY4541 EZ-PD CCG4 EVK supports power up to 100 W (20 V, 5 A). The power adapter provided with the kit can support only up to 2.7 A (at 24 V). The USB 3.0 Type-C EMCA cable provided with the kit can support only up to 3 A.

2.1.1 Hardware Not Included With the Kit

The CY4541 EZ-PD CCG4 EVK does not come with all the hardware needed to perform the demonstrations documented in DRP and SuperSpeed USB Demo. The following hardware is not included with this kit:

- A multimeter to measure voltage.
- Two USB pen drives for Kit Operation.
- DisplayPort cables to connect the PC to the CCG EVK base board. If the PC has a Mini DisplayPort, then a Mini DisplayPort to DisplayPort cable will be required.
- Type-C to DP adapters (available on the web) to connect a display monitor to the CY4541 EZ-PD CCG4 EVK board, which only has a DisplayPort interface.
- Display Splitter adapter (available on the web) for the kit to operate during the dual DisplayPort demonstration.
- A USB Type-C power adapter (available on the web) for DRP kit operation. Dual Type-C port operation requires a USB Type-C power adapter that supports a 14-V to 20-V power profile.
- A display monitor with DisplayPort (DP), HDMI, or VGA interface for the DisplayPort demonstration.
- A PC with two USB ports. USB 3.0 ports and Windows XP, or later operating system, is recommended.

2.2 Getting Started

For instructions on how to run a quick demonstration and observe kit functionality, refer to DRP and SuperSpeed USB Demo.

2.3 List of Recommended Hardware

See Table 2-1 for the list of recommended hardware for this kit to demonstrate the Dual Role Port (DRP) and DisplayPort Connection.

Table 2-1. List of Recommended Cables

No.	Description	Manufacturer	MPN	Vendor Link
1	DisplayPort to DisplayPort Cable (6”, gold plated)*	Cable Matters	102005-6	Cablematters Link
2	Mini DisplayPort to DisplayPort Cable (3”, gold plated)*	Cable Matters	101007-BLACK-3	Cablematters Link
3	Display Splitter Adapter	Lenovo	0B47092	Lenovo Link
4	USB Type-C to DisplayPort Adapter	Cable Matters	--	Amazon Link
	USB Type-C to HDMI Adapter	Cable Matters	--	Amazon Link
	USB Type-C to VGA Adapter	Cable Matters	--	Amazon Link
5	USB Type-C power adapter that supports 14V or above	Apple	--	Apple Store Link
6	USB 3.0 pen drive	SanDisk	--	Amazon Link

***Note**: Use item 1 in Table 2-1 if the PC has a DisplayPort connector. Use item 2 in Table 2-1 if the PC has a Mini DisplayPort connector.

Refer to the Knowledge Base Article KBA12598 for getting information on the known issues of Apple USB-C Digital AV Multiport Adapter and Apple 29W USB-C Power Adapter while using with CY4541 EZ-PD CCG4 EVK.

3. Kit Installation

This chapter describes how to install the CY4541 EZ-PD CCG4 EVK.

3.1 CY4541 EZ-PD CCG4 EVK Kit Software Installation

To install the kit software, follow these steps:

1. Download the latest kit software setup, *CY4541Setup.exe*, from www.cypress.com/CY4541. This package contains the kit hardware files, kit guide, and quick start guide. Double-click ***CY4541Setup.exe*** to start the installation. Click **Next** when the screen shown in Figure 1 appears.

Figure 1. CY4541 EZ-PD CCG4 EVK Installer Screen

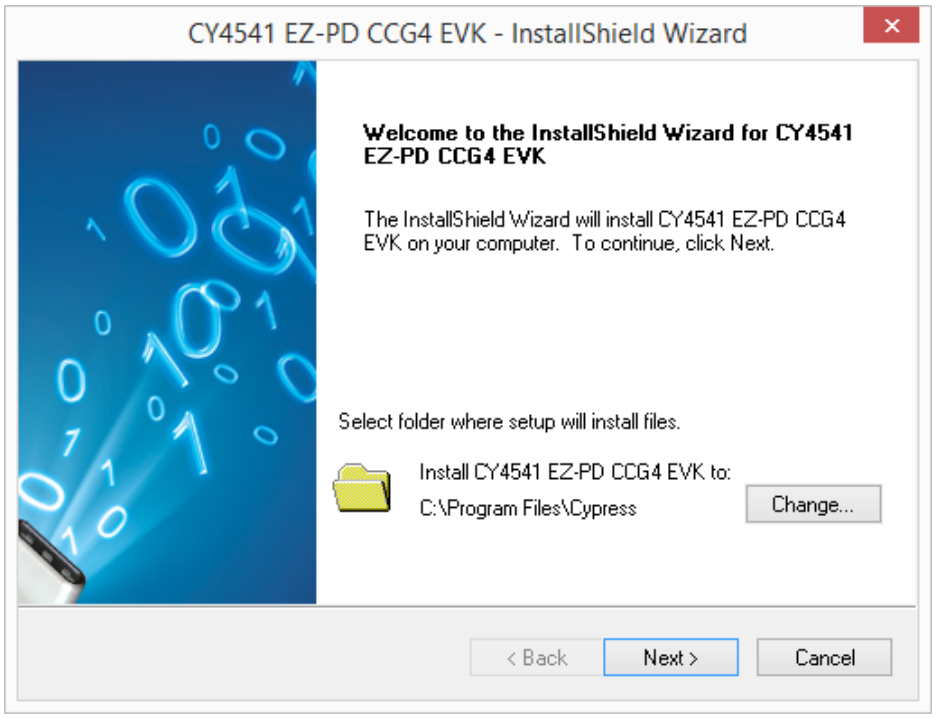

2. Select the required **Installation Type** and click the **Next** button to start the installation (Figure 2). For first-time installation, it is recommended that you select “Typical” as the **Installation Type**.

Figure 2. Installation Wizard

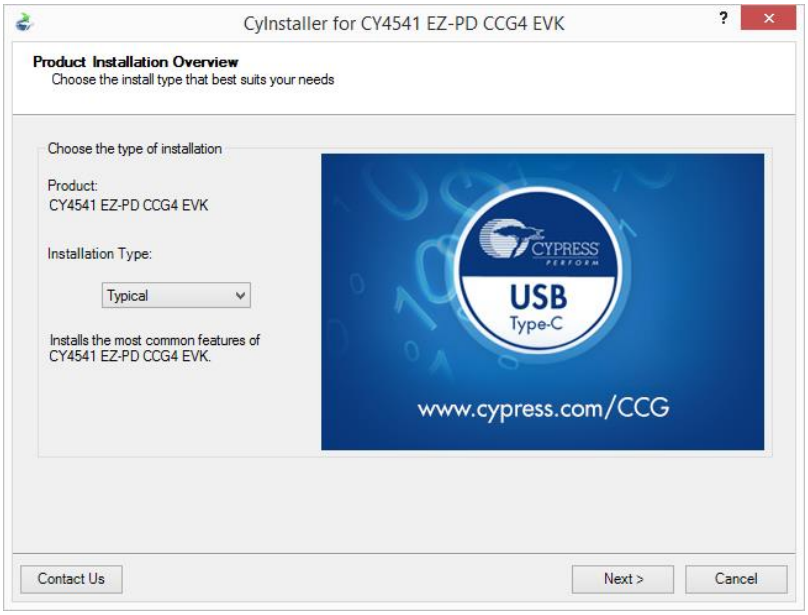

3. Accept the license agreement for the software components and click **Next** (Figure 3) to proceed with the installation. If you do not accept the terms in the agreement, click **Cancel** to exit from the installation.

Figure 3. License Agreement

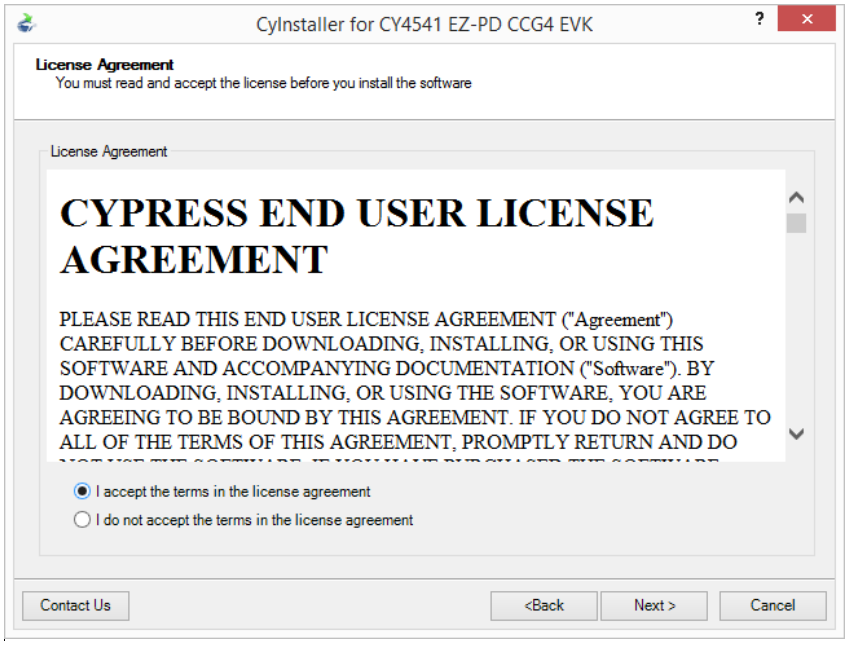

4. Figure 4 shows the installation progress. EZ-PD Configuration Utility also gets installed along with CY4541 EZ-PD CCG4 EVK.

Figure 4. Installation Progress

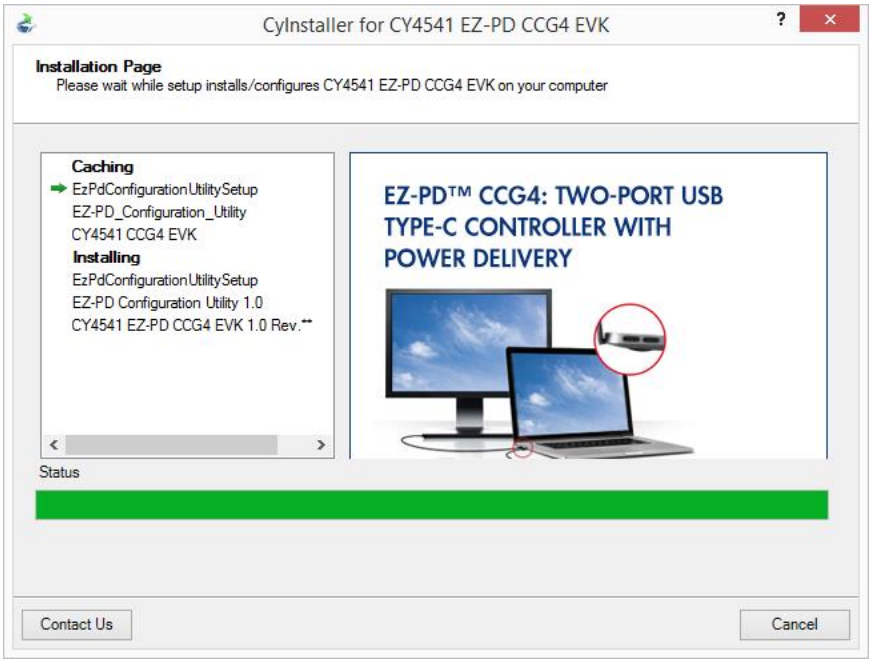

5. Click **Finish** when complete (Figure 5).

Figure 5. Software Installation Complete

6. When the installation is complete, you have the option to **Launch Update Manager** to ensure you have the latest software package. Click the **Check for updates** button at the bottom of the window. If “No Updates” appears adjacent to the CY4541 EZ-PD CCG4 EVK, click the **Exit** button. If there are updates, click the **Update** button to download and install the latest kit package.

Figure 6. Cypress Update Manager

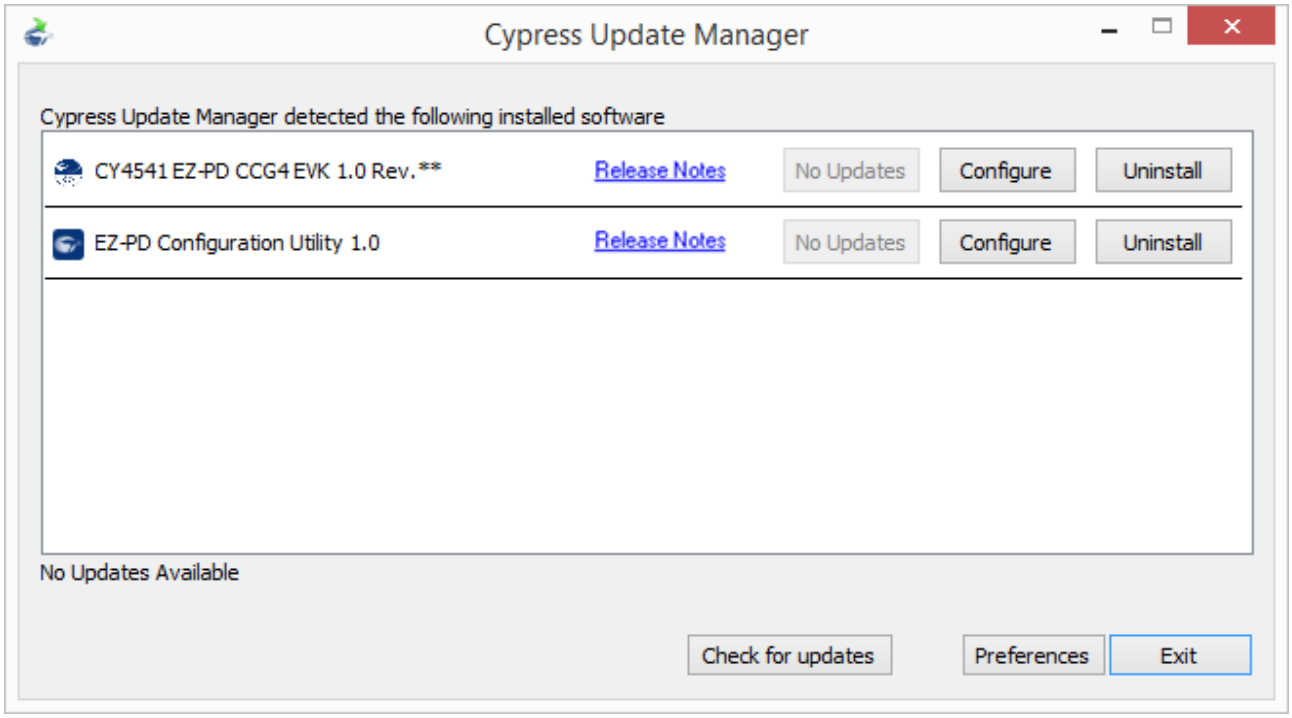

Note: You can launch the Cypress Update Manager from **Start** > **All Programs** > **Cypress** > **Cypress Update Manager**. The latest revision number of CY4541 EZ-PD CCG4 EVK may vary from the image shown in Figure 6.

7. After the installation is complete, the contents are available at the following location:
`<Install Directory>\CY4541 CCG4 EVK\1.0.`

Note: On the Windows 32-bit platform, the default <Install Directory> is `C:\Program Files\Cypress`; on the Windows 64-bit platform, it is `C:\Program Files(x86)\Cypress.`

4. CY4541 EZ-PD CCG4 EVK Hardware

4.1 CY4541 EZ-PD CCG4 EVK Architecture

Figure 7. CY4541 EZ-PD CCG4 EVK System-level Block Diagram

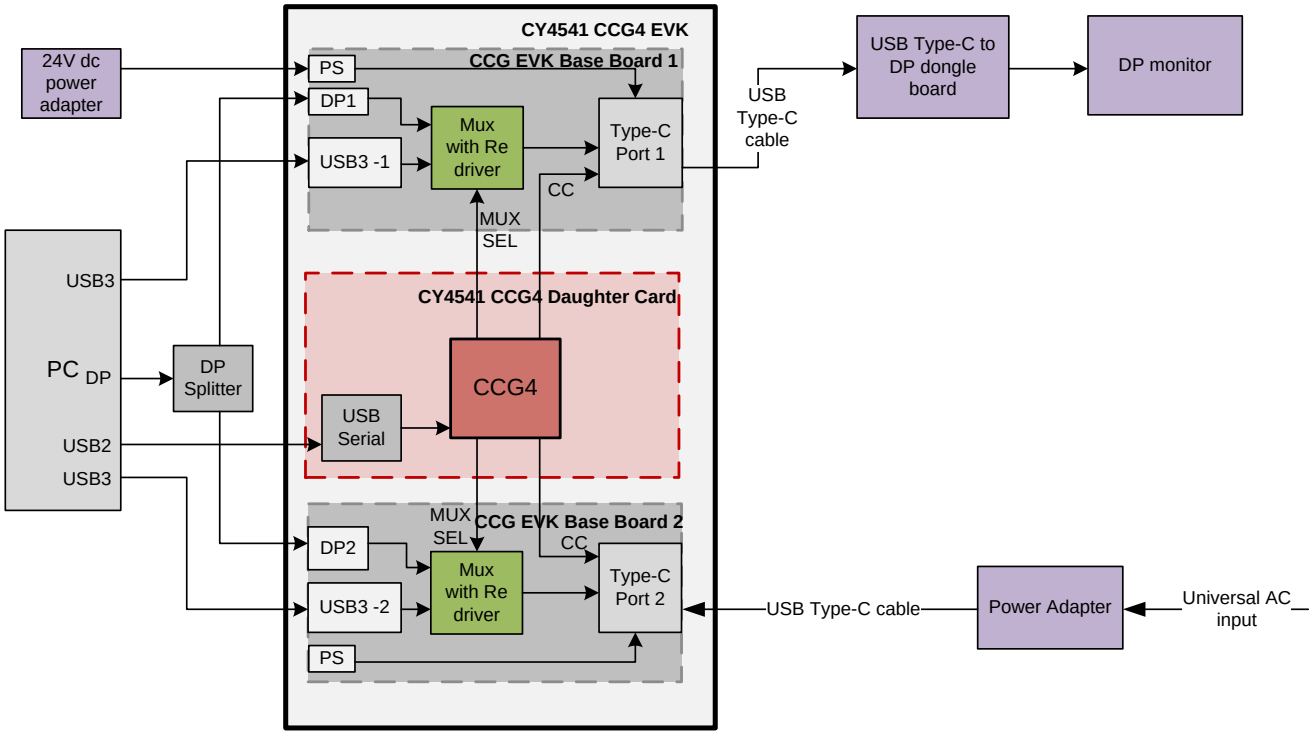

CCG4 is a dual USB Type-C controller that complies with the latest USB Type-C and PD standards. CCG4 provides a complete dual USB Type-C and USB-PD port control solution for PC designs. It can also be used in DRP applications in which a USB Type-C port can switch its power role from provider to consumer and vice-versa. CCG4 uses Cypress's proprietary M0S8 technology integrated with a 32-bit, 48-MHz ARM® Cortex®-M0 processor, 128-KB flash, and two Type-C transceivers including the Type-C termination resistors R_P and R_D.

The CY4541 EZ-PD CCG4 EVK consists of two CCG EVK base boards and one CY4541 CCG4 daughter card. The CY4541 CCG4 daughter card is connected to the two CCG EVK base boards to evaluate the CCG4's dual Type-C port capability as shown in Figure 7.

The CCG EVK base board consists of a DC input power supply, a display multiplexer, a DisplayPort connector, a SuperSpeed Type-B port, and a Type-C port. The CY4541 CCG4 daughter card consists of the CCG4 device and a USB-Serial IC to provide a USB interface for debugging. CCG4's CC lines of the respective Type-C interface are connected to the Type-C port on the CCG EVK base board. CCG4 controls the display multiplexer over an I2C interface.

The CY4541 EZ-PD CCG4 EVK has a power provider and power consumer path control circuitry to showcase CCG4's ability to switch its power role from a provider to a consumer and vice-versa. This EVK has overvoltage and overcurrent protection circuitry for VBUS and VCONN; it also supports programming CCG4 devices over SWD and I2C interfaces.

A PC with two USB 3.0 ports and a DisplayPort along with the CY4541 EZ-PD CCG4 EVK is equivalent to a PD-enabled dual Type-C port PC.

4.2 CY4541 EZ-PD CCG4 EVK

Figure 8 shows the CY4541 EZ-PD CCG4 EVK setup, in which two CCG EVK base boards are connected to the CY4541 CCG4 daughter card.

Figure 8. CY4541 EZ-PD CCG4 EVK Setup

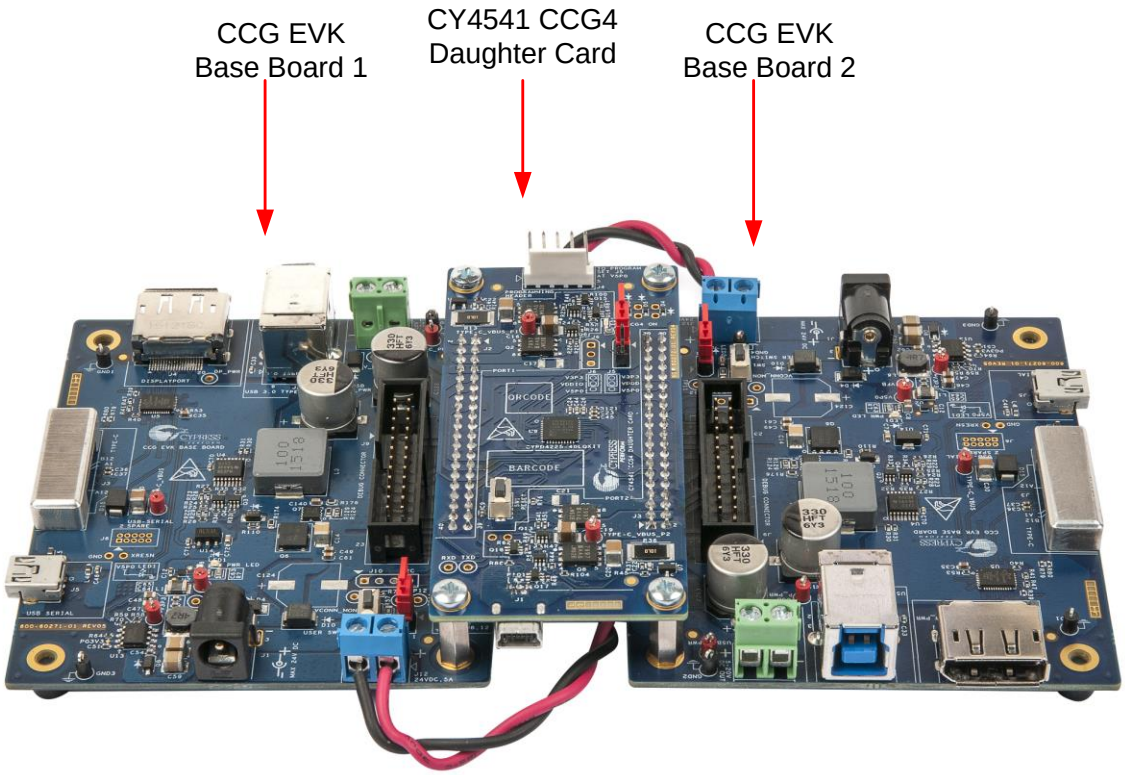

The following sections describe the CCG EVK base board and daughter card design.

4.3 CCG EVK Base Board

The CCG EVK base board is an evaluation board equipped with a Type-C port, a SuperSpeed USB Type-B port, and a DisplayPort interface. It is primarily intended as a demonstration board for PC designs that house a Type-C connector. The board also serves as a vehicle to evaluate the alternate Type-C modes, using the DisplayPort demo as an example.

4.3.1 Block Diagram

Figure 9 shows the CCG EVK base board block diagram. It has an onboard Type-C connector for the USB-PD interface and a CY4541 CCG4 daughter card interface connector to connect the CY4541 CCG4 daughter card. It also includes a SuperSpeed USB Type-B port and a DisplayPort connector to source video. The SuperSpeed USB signals and DisplayPort signals are connected to the Type-C connector through a display multiplexer controlled by the CCG4 device. A DC power adapter provides input voltage to the onboard Power Management IC (PMIC). The output voltage from the PMIC can be selected using two voltage selection lines, controlled by CCG4. This CCG EVK base board, along with the CY4541 CCG4 daughter card, helps convert any desktop or notebook PC with legacy USB ports to operate as a Type-C USB host.

Figure 9. CCG EVK base board Block Diagram

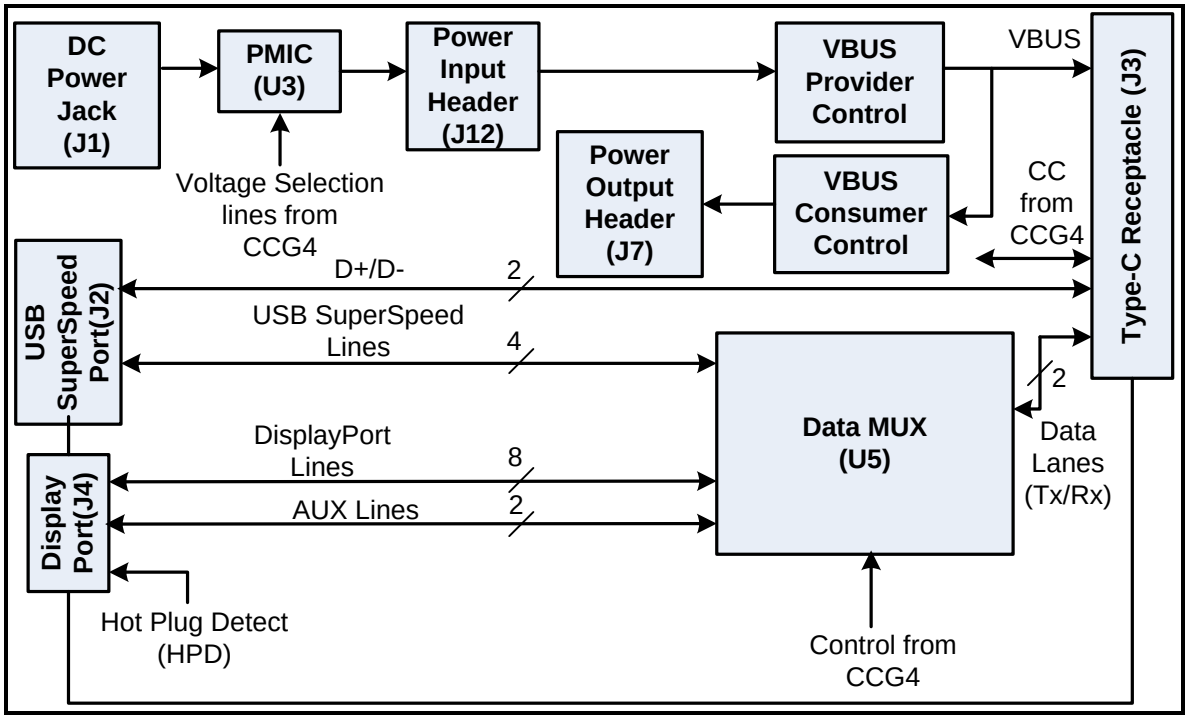

4.3.2 Features

Table 4-1 shows the features of the CCG EVK base board.

Table 4-1. CCG EVK Base Board Features

Feature	Description
Power	Negotiated power from the DC power adapter controlled by PMIC and CCG4. 5 V from the Type-C connector (for dead battery support). For the dual Type-C port operation of this kit, use a USB Type-C power adapter that supports a 9 V to 20 V power profile. Note that the DC power adapter provided with the kit can support only up to 2.7A (at 24 V). This kit will not work with 5 V DC power adapters.
CY4541 CCG4 daughter card interface connector	Provides interface to connect the CY4541 CCG4 daughter card to the CCG EVK base board
Type-C Plug Orientation, Detection and Alternate modes	I2C interface between CCG4 and the display multiplexer to select between SuperSpeed USB and 2-lane or 4-lane DisplayPort.
	Hot Plug Detect (HPD) for DisplayPort Alternate mode of operation.

4.3.3 Connectors and Jumper Settings

Figure 10 shows the CCG EVK base board connectors and the default jumper settings.

Figure 10. CCG EVK Base Board Connectors

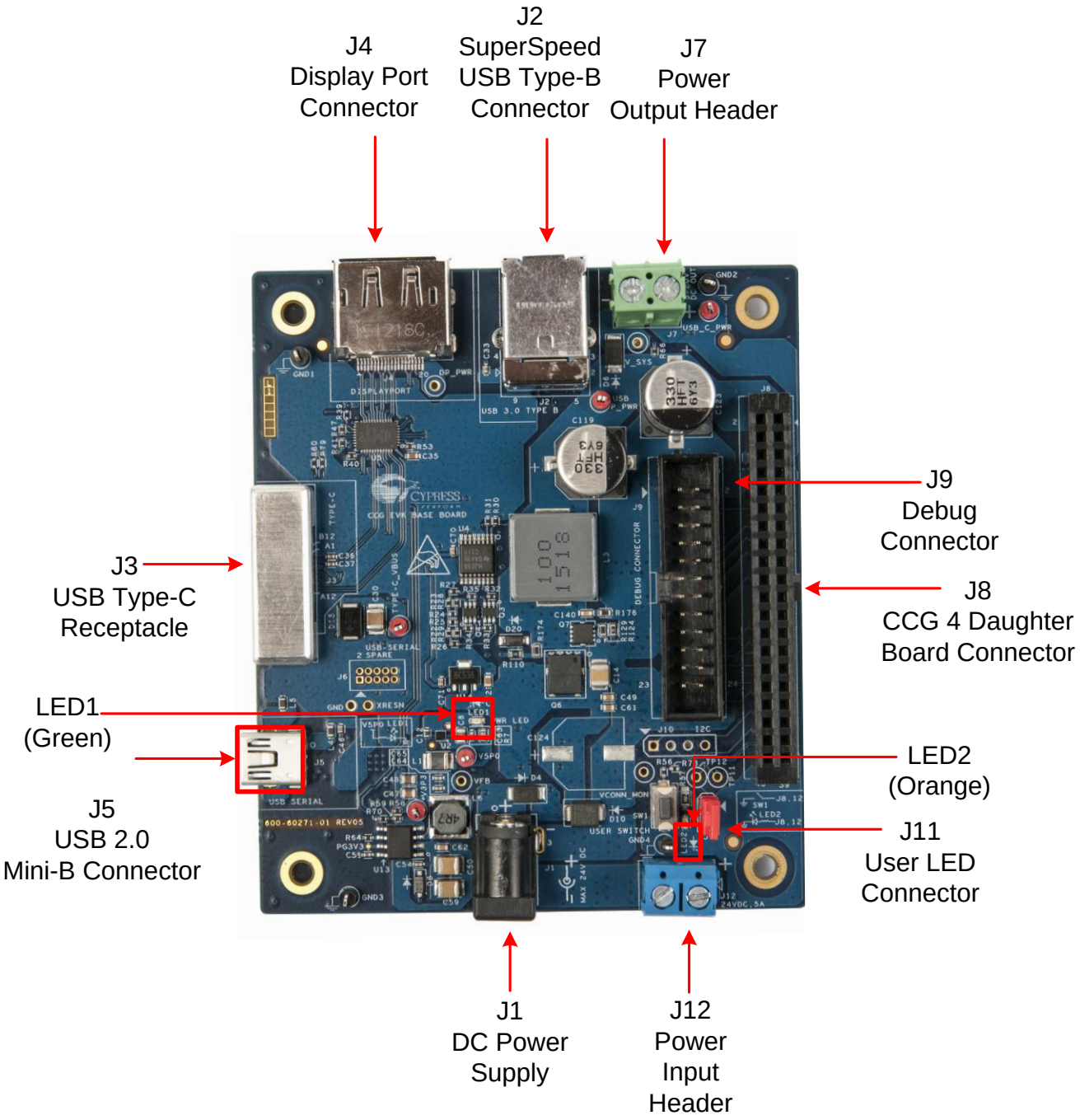

Table 4-2 shows a detailed description of the connectors and jumper settings.

Table 4-2. CCG EVK Base Board Jumper/Connector Description

Jumper/Connector	Description		Default
J1	DC power jack to connect the DC power adapter to the CCG EVK base board		NA
J2	SuperSpeed USB Type-B connector (receptacle)		NA
J3	USB Type-C connector (receptacle)		NA
J4	DisplayPort connector		NA
J7	Header for voltage measurement when CCG4 acts as power consumer or power output header		NA
J8	CY4541 CCG4 daughter card interface connector		NA
	Pin 1: USB_P_PWR (USB Provider power)	Pin 2: USB_P_PWR (USB Provider power)	
	Pin 3: Type-C VBUS	Pin 4: Type-C VBUS	
	Pin 5: USB_C_PWR (USB Consumer power)	Pin 6: USB_C_PWR (USB Consumer power)	
	Pin 7: GND	Pin 8: GND	
	Pin 9: SW0/I2C_SCL	Pin 10: VBUS_DISCHRG	
	Pin 11: SW1/I2C_SDA	Pin 12: CCG_SWD_IO	
	Pin 13: OCP (Over Current Protection)	Pin 14: CCG_SWD_CLK	
	Pin 15: AC Adapter Det1	Pin 16: CCG_XRES	
	Pin 17: VSEL2 (Voltage Selection line 2)	Pin 18: I2C_ADDR0	
	Pin 19: V5P0	Pin 20: VCONN_MON	
	Pin 21: CC1	Pin 22: CC2	
	Pin 23: V3P3	Pin 24: VBUS_P_CTRL (VBUS Provider Control)	
	Pin 25: RXD	Pin 26: VBUS_MON_GPIO (VBUS Monitoring I/O)	
	Pin 27: TXD	Pin 28: I2C_INT_EC	
	Pin 29: MUX_DP_AUXN	Pin 30: VBUS_C_CTRL (VBUS Consumer Control)	
	Pin 31: MUX_DP_AUXP	Pin 32: OVP_TRIP (Overvoltage Detection Signal)	
	Pin 33: SBU2	Pin 34: I2C_SDA_EC	
	Pin 35: SBU1	Pin 36: HOTPLUG_DET	
	Pin 37: I2C_SCL_EC	Pin 38 : Test Point (TP12, USBDP signal)	
	Pin 39: VSEL1 (Voltage selection line 1)	Pin 40: Test Point (TP11, USBDM signal)	
J9	Debug connector		NA
	Pin 1: Type-C VBUS	Pin 2: Type-C VBUS	
	Pin 3: CCG_SWD_IO	Pin 4: CCG_XRES	
	Pin 5: CC1	Pin 6: CC2	
	Pin 7: I2C_SCL_EC	Pin 8: I2C_SDA_EC	
	Pin 9: I2C_INT_EC	Pin 10: HOTPLG_DET	
	Pin 11: SW0/I2C_SCL	Pin 12: SW1/I2C_SDA	
	Pin 13: SW2	Pin 14: OCP (Over Current Protection)	
	Pin 15: CCG_SWD_CLK	Pin 16: OVP_TRIP	
	Pin 17: VSEL1 (Voltage Selection line 1)	Pin 18: VSEL2 (Voltage Selection line 2)	
	Pin 19: VBUS_P_CTRL (VBUS Provider Control)	Pin 20: VBUS_DISCHRG	
	Pin 21: VBUS_MON_GPIO	Pin 22: VBUS_C_CTRL (VBUS Consumer Control)	
	Pin 23: GND	Pin 24: GND	

Jumper/Connector	Description	Default
J11	User LED header - connects CCG4 SWD_IO pin to LED2 when shorted. Pin 1: SWD_IO Pin 2: LED	Short pin 1 and pin2
J12	Header for voltage measurement when CCG4 acts as power provider or power input header.	NA
J5	USB 2.0 Mini-B connector (receptacle)	NA

4.4 CY4541 CCG4 Daughter Card

The CY4541 CCG4 daughter card is an evaluation board with a CCG4 controller (CYPD4225-40LQXIT) and a USB-Serial Bridge Controller (CY7C65215) to provide a USB interface for debugging. The CY4541 CCG4 daughter card must be assembled with the CCG EVK base boards. This complete assembly setup supports Type-C host applications such as PCs.

PD-enabled USB products (such as a PC with a Type-C port) operate as a power provider and a power consumer. The USB PD specification refers to such USB Type-C ports as Dual Role Ports (DRPs).

4.4.1 Block Diagram

Figure 11 shows the CY4541 CCG4 daughter card block diagram.

Figure 11. Block Diagram of CY4541 CCG4 Daughter Card

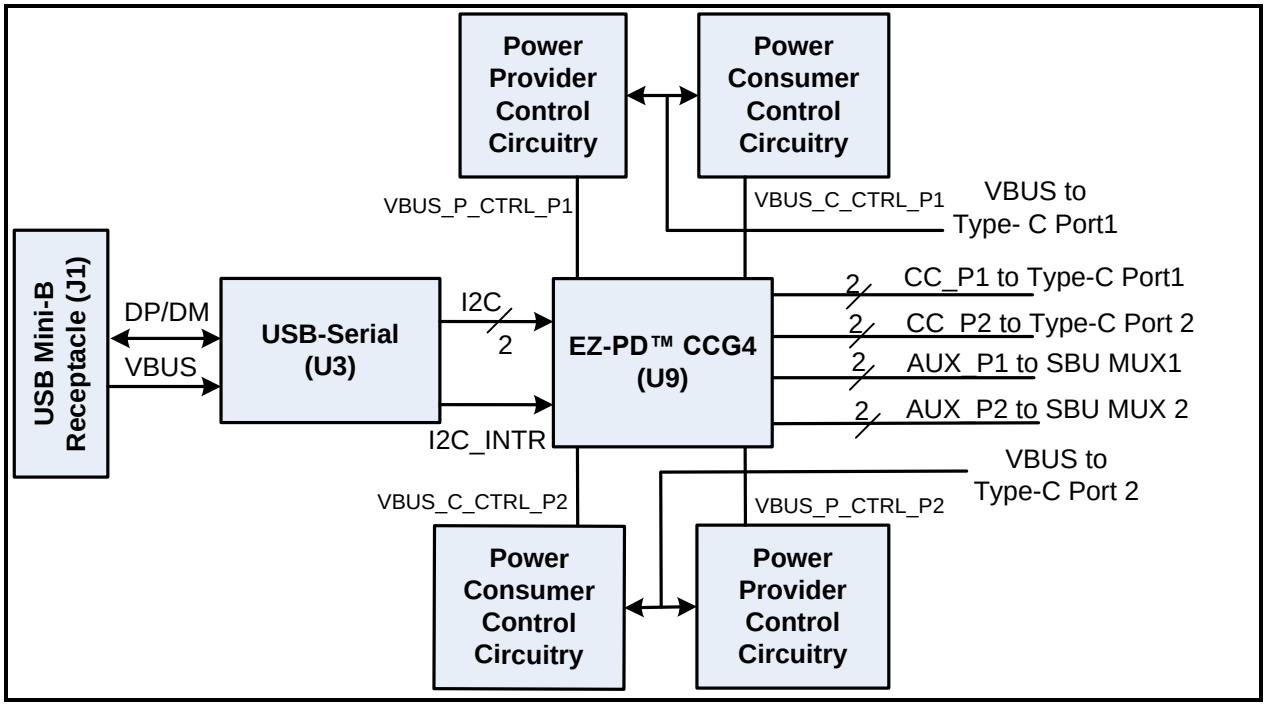

4.4.2 Features

Table 4-3 lists the CY4541 CCG4 daughter card features.

Table 4-3. CY4541 CCG4 daughter card Features

Feature	Description
CCG4 device	CYPD4225-40LQXIT
CCG4 package	40-QFN
USB PD/ Type-C	Dual Type-C port support
	Ability to act as power provider (source) and power consumer (sink)
	Supports the following PD capabilities (VSEL pins): 5 V up to 3 A 5 V up to 5 A 9 V up to 5 A 15 V up to 5 A 20 V up to 5 A
	VBUS provider and consumer FET control for VBUS source or sink path
	VBUS discharge control FET
VBUS Provider path and Consumer path control	VBUS provider path and consumer path control FETs per Type-C port
OVP and OCP	VCONN overcurrent protection
	VBUS overvoltage protection
	VBUS overcurrent protection
Plug orientation, Detection and Alternate modes	Dual Alternate mode/Display support
	Three mux-select pins per Type-C port to select between SuperSpeed USB and 2-lane or 4-lane DisplayPort
	Hot Plug Detect (HPD) for DisplayPort Alternate Mode operation
	SBU (Side Band Use) multiplexer support to select between Auxiliary lines and UART TXD/RXD signals
USB/I2C Programming	USB Type-B Mini receptacle connected to USB-to-serial device, which programs the CCG4 controller using the EZ-PD Configuration Utility
SWD Programming	SWD pin debugging/programming using MiniProg3 device (not provided with the kit)
Power	5 V from DC power jack 5 V regulated from Type-C connector 5 V from USB Type-B mini connector 1.8 V/3.3 V/5 V From SWD programming header

4.4.3 Connectors and Jumper Settings

Figure 12 shows the CY4541 CCG4 daughter card connectors and default jumper settings. Table 4-4 lists the jumpers and header description and default settings.

Figure 12. CY4541 CCG4 Daughter Card Connectors

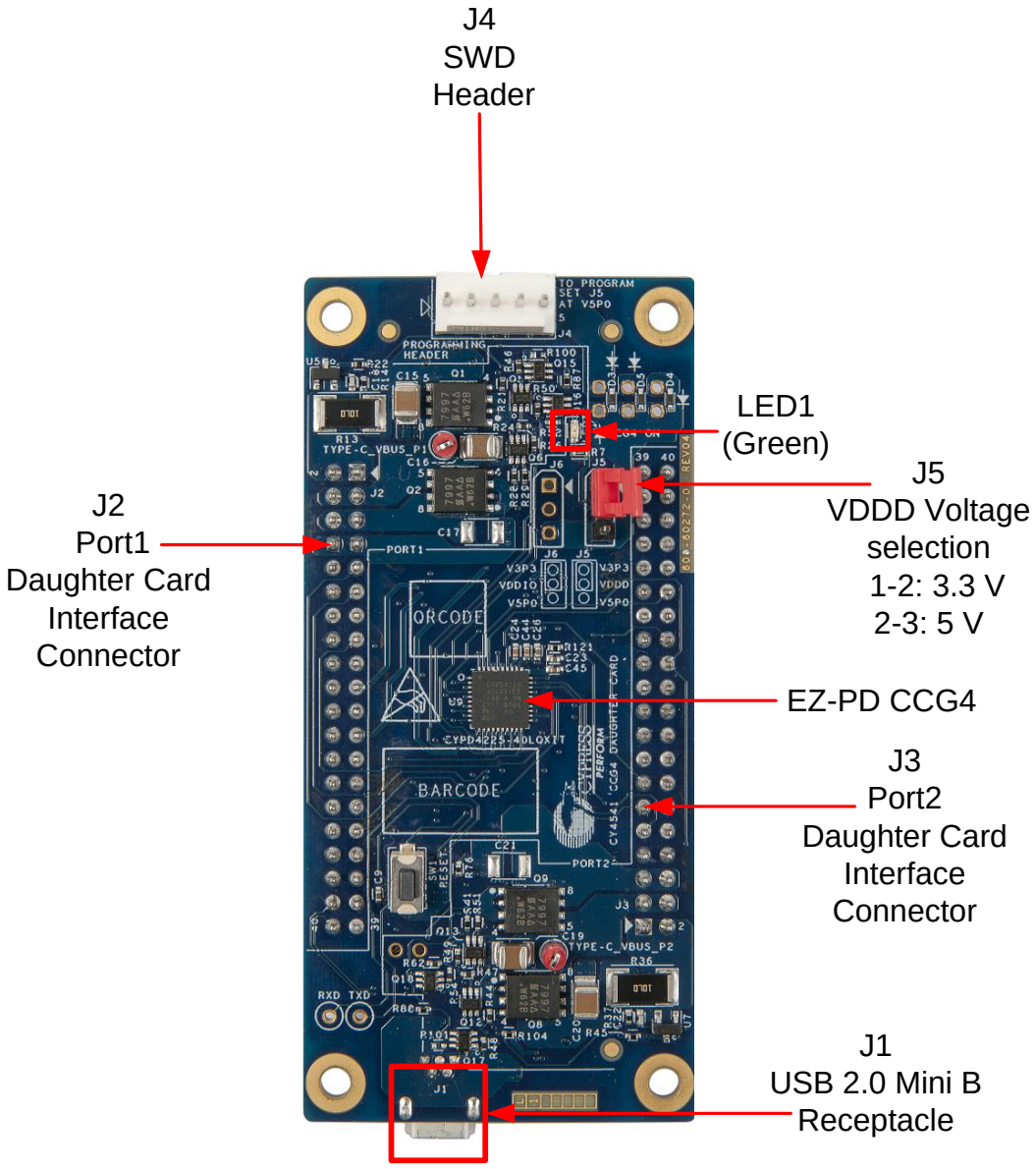

Table 4-4. CY4541 CCG4 daughter card Jumper Description and Default Settings

Jumper/Connector	Description		Default
J1	USB 2.0 Mini-B connector (receptacle)		NA
J2	Type-C Port1 interface		NA
	Pin 1: USB_P_PWR_P1 (USB Provider power)	Pin 2: USB_P_PWR_P1 (USB Provider power)	
	Pin 3: Type-C_VBUS_P1	Pin 4: Type-C_VBUS_P1	

Jumper/Connector	Description		Default
	Pin 5: USB_C_PWR_P1 (USB Consumer power)	Pin 6: USB_C_PWR_P1 (USB Consumer power)	
	Pin 7: GND	Pin 8: GND	
	Pin 9: I2C_SCL	Pin 10: VBUS_DISCHRG_P1	
	Pin 11: I2C_SDA	Pin 12: SWD_IO	
	Pin 13: OCP_P1 (Over Current Protection)	Pin 14: SWD_CLK	
	Pin 15:P_PWR_P1_MON	Pin 16: XRES	
	Pin 17: VSEL2 _P1(Voltage Selection line 2)	Pin 18: I2C_ADDR_P1	
	Pin 19: V5P0_P1	Pin 20: No Connect	
	Pin 21: CC1_P1	Pin 22: CC2_P1	
	Pin 23: V3P3_P1	Pin 24: VBUS_P_CTRL_P1 (VBUS Provider Control)	
	Pin 25: RXD_P1	Pin 26: VBUS_MON_P1 (VBUS Monitoring I/O)	
	Pin 27: TXD_P1	Pin 28: I2C_INT_EC	
	Pin 29: DP_AUXN_P1	Pin 30: VBUS_C_CTRL_N_P1 (VBUS Consumer Control)	
	Pin 31: DP_AUXP_P1	Pin 32: OVP_TRIP_P1 (Overvoltage Detection Signal)	
	Pin 33: SBU2_P1	Pin 34: I2C_SDA_EC	
	Pin 35: SBU1_P1	Pin 36: HOTPLUG_DET_P1	
	Pin 37: I2C_SCL_EC	Pin 38 : USB2_DP	
	Pin 39: VSEL1 _P1(Voltage selection line 1)	Pin 40: USB2_DM	
J3	Type-C Port2 Interface		NA
	Pin 1: USB_P_PWR_P2 (USB Provider power)	Pin 2: USB_P_PWR_P2 (USB Provider power)	
	Pin 3: Type-C_VBUS_P2	Pin 4: Type-C_VBUS_P2	
	Pin 5: USB_C_PWR_P2 (USB Consumer power)	Pin 6: USB_C_PWR_P2 (USB Consumer power)	
	Pin 7:GND	Pin 8:GND	
	Pin 9: I2C_SCL	Pin 10: VBUS_DISCHRG_P2	
	Pin 11: I2C_SDA	Pin 12: No Connect	
	Pin 13: OCP_P2 (Over Current Protection)	Pin 14: No Connect	
	Pin 15: P_PWR_P2_MON	Pin 16: No Connect	
	Pin 17: VSEL2 _P2(Voltage Selection line 2)	Pin 18: I2C_ADDR_P2	
	Pin 19: V5P0_P2	Pin 20: VCONN_MON	

Jumper/Connector	Description		Default
	Pin 21: CC1_P2	Pin 22: CC2_P2	
	Pin 23: V3P3_P2	Pin 24: VBUS_P_CTRL_P2 (VBUS Provider Control)	
	Pin 25: RXD_P2	Pin 26: VBUS_MON_P2 (VBUS Monitoring I/O)	
	Pin 27: TXD_P2	Pin 28: No Connect	
	Pin 29: DP_AUXN_P2	Pin 30: VBUS_C_CTRL_N_P2 (VBUS Consumer Control)	
	Pin 31: DP_AUXP_P2	Pin 32: OVP_TRIP_P2 (Overvoltage	
	Pin 33: SBU2_P2	Pin 34: No Connect	
	Pin 35: SBU1_P2	Pin 36: HOTPLUG_DET_P2	
	Pin 37: No Connect	Pin 38 : SW1_P2	
	Pin 39: VSEL1 _P2(Voltage selection line 1)	Pin 40: SW0_P2	
J4	SWD Programming header		NA
	Pin 1: VTARG		
	Pin 2: GND		
	Pin 3: XRES		
	Pin 4: SWD_CLK		
	Pin 5: SWD_IO		
J5	VDDD voltage selection for CCG4 device 1 and 2 short: 3.3 V 2 and 3 short: 5.0 V		Short pin1 and pin2

4.5 CCG EVK Base Board and CCG4 Daughter Card Revisions

Table 4-5 provides details about the latest revision of the CCG EVK Base Board and CCG4 Daughter Card

Table 4-5: Revision of CCG EVK Base Board and CCG4 Daughter Card

Board	Revision
CCG EVK Base Board	Rev 05
CCG4 Daughter Card	Rev 04

Schematic and BoM details for the latest revision of hardware are available in Appendix A. The complete set of latest hardware files (Schematic, BoM & Layout) files are available under `<Install Directory>\CY4541 CCG4 EVK\1.0\Hardware`.

Revision number of a given hardware can be identified on the PCB as shown in Figure 13.

Figure 13: Revision Number of CCG EVK Base Board

Note that hardware design files (Schematic, BoM & Layout) of the earlier revisions of the hardware are also available as part of the kit installer. Refer to <`Install Directory`>`\CY4541 CCG4 EVK\1.0\Hardware\README.txt` to get more details.

5. Programming the CCG4 Device

The CCG4 device in the CY4541 EZ-PD CCG4 EVK is preprogrammed with the latest cyacd* firmware binary image at the time of manufacturing. However, a more recent *cyacd** file for CCG4 is available on the CY4541 EZ-PD CCG4 EVK webpage as well as in the CY4541 EZ-PD CCG4 EVK installer. The firmware version of the onboard CCG4 device can be verified by using the EZ-PD Configuration Utility as shown in Figure 17. If the onboard CCG4's firmware version does not match the latest version on the CY4541 EZ-PD CCG4 EVK webpage, follow the steps in this chapter to reprogram the CCG4 device. This firmware update is required for successful kit operation. Device configuration parameters (such as vendor ID, Power Data Objects (PDOs), DisplayPort mode parameters) can be updated using EZ-PD Configuration Utility. Refer to the EZ-PD Configuration Utility User Manual for more details.

Note *: cyacd is the bootloader application and code data file format. The file consists of a header followed by lines of flash data. Excluding the header, each line in the .cyacd file represents an entire row of flash data. The data is stored as ASCII data in Big Endian format.

5.1 Programming CCG4 Device on the CY4541 CCG4 Daughter Card

Follow these steps to update the firmware running on the CCG4 device of the CY4541 CCG4 daughter card:

1. If the kit installation is not performed yet or was not performed recently, install the latest version of the software by downloading and installing the latest kit setup *CY4541Setup.exe* from www.cypress.com/CY4541.
2. Ensure that the voltage selection jumper (J5) is set to 5 V (pins 2 and 3 of jumper J5 on the CY4541 CCG4 daughter card are shorted).
3. Connect the boards and cables (USB 2.0 USB 2.0 Type-A to Mini-B cable, DC power adapter, and wires between the power input header (J12) on CCG EVK base board 1 and CCG EVK base board 2) as shown in Figure 14. Connect the DC power adapter to CCG EVK base board 1.

Figure 14. Programming the CCG4 Device

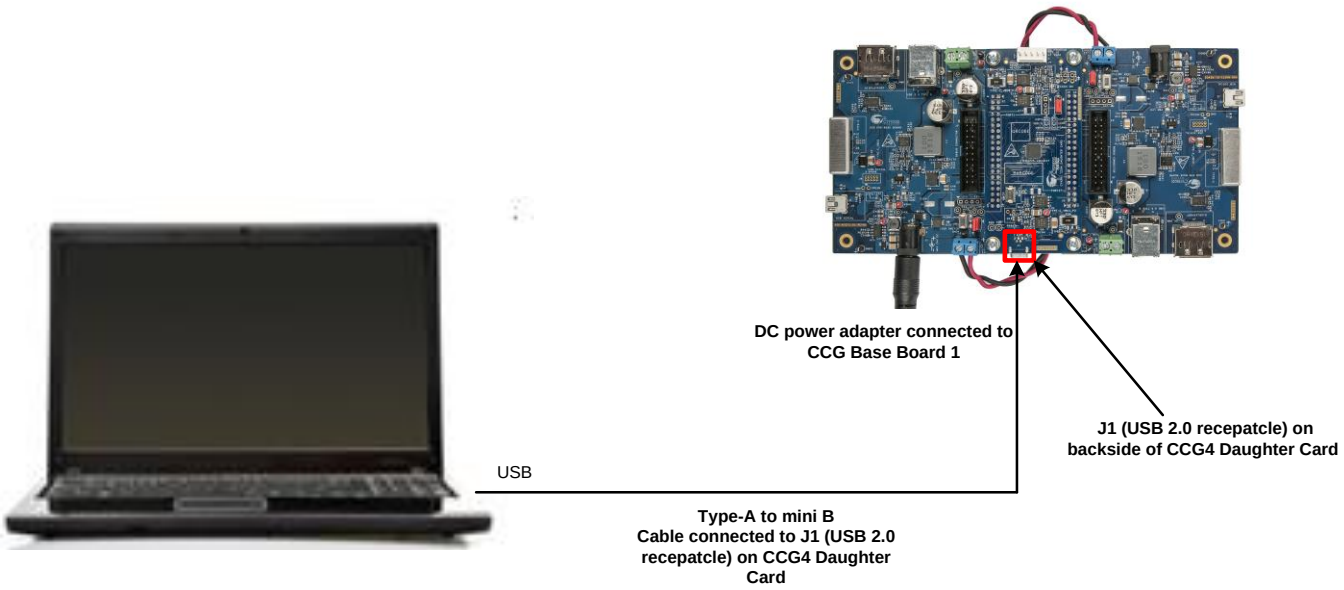

4. The EZ-PD Configuration Utility is a Microsoft Windows Application, which can be used to configure and program the CCG4 device on the CY4541 CCG4 daughter card. After the kit installation, EZ-PD Configuration utility is available at the following location:

   <Install_Directory>/Cypress/ EZ-PD Configuration utility

   Alternatively, download and install the EZ-PD Configuration Utility from the Cypress webpage.

5. Open the EZ-PD Configuration Utility as shown in Figure 15. After the installation, the EZ-PD Configuration Utility is available at the following location:

   Start > **All Programs** > **Cypress > EZ-PD Configuration Utility** > **EZ-PD Configuration Utility.exe**

Figure 15. EZ-PD Configuration Utility

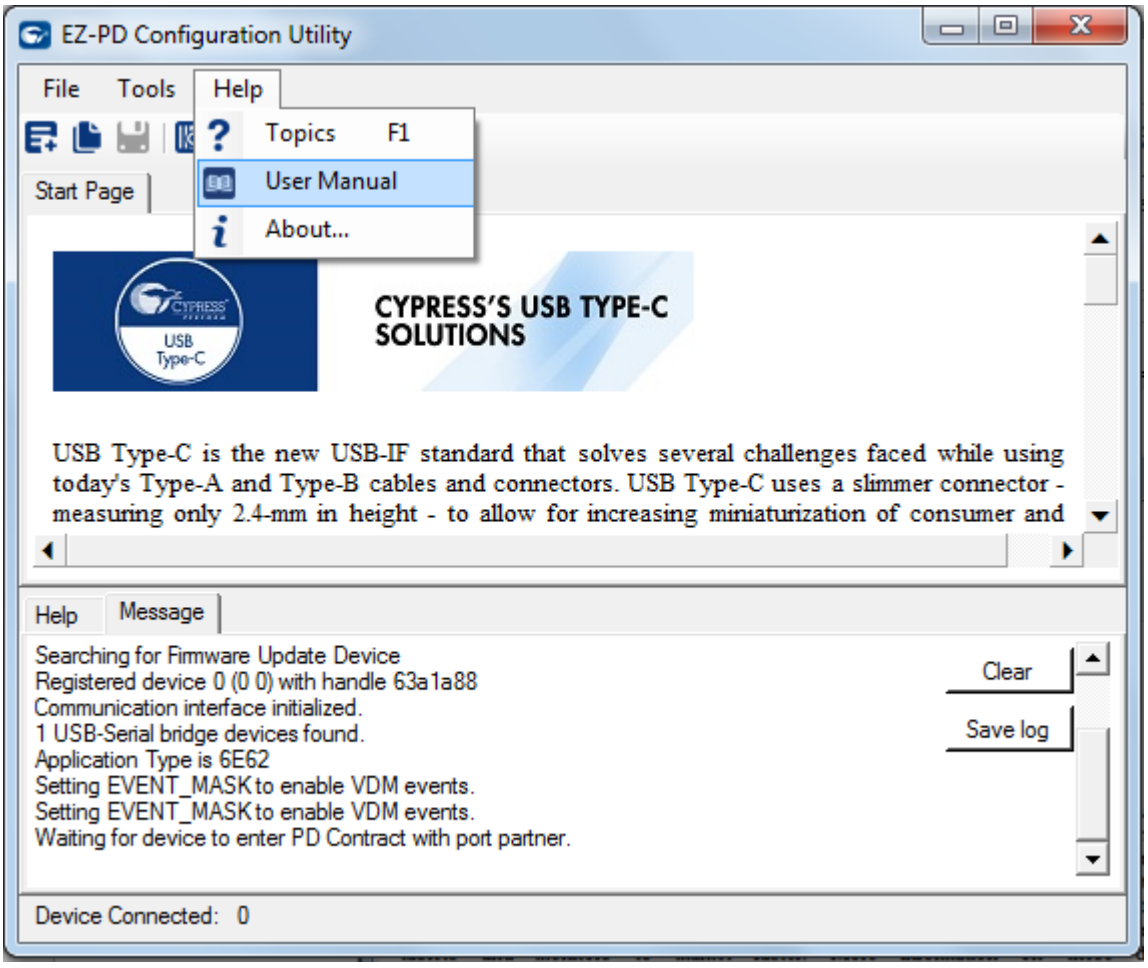

6. Select the **Tools** > **Firmware Update** menu option to update the firmware of the CCG4 device as shown in Figure 16. Refer to the EZ-PD Configuration Utility User Manual for more details. To open this document, click Help > User Manual in the EZ-PD Configuration Utility as shown in Figure 16.

Figure 16. Upgrading CCG4 Firmware

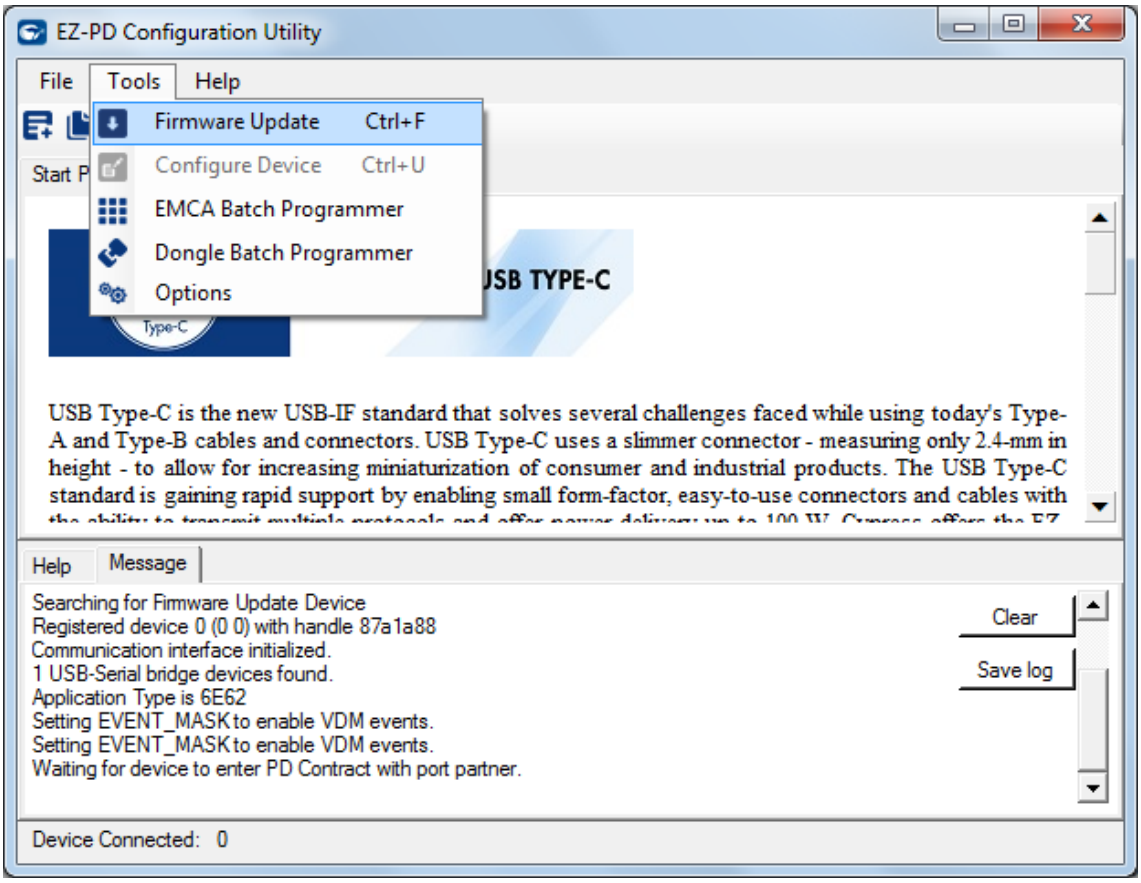

7. The internal device flash contains two copies of the firmware, which can mutually update each other. These copies are called FW1 and FW2, and are designed to be placed at different flash locations. If the CCG4 device is currently running FW1, only FW2 can be updated and vice-versa. Specify both firmware binaries in the Firmware path 1 and Firmware path 2 widgets. The EZ-PD Configuration Utility selects the appropriate firmware binary image based on the current image running in CCG4. To update both FW1 and FW2 binary images, perform step 9 and step 10 twice. When Step 9 and 10 are executed the first time after connecting the EVK, the FW1 image is updated. When steps 9 and 10 are repeated, the EZ-PD Configuration utility dynamically switches the firmware image to FW2 and, the FW2 image is updated in the CCG4 device.

8. Download the latest CY4541 firmware from the CY4541 EZ-PD CCG4 EVK webpage. The firmware binary images are also available at the following location after the CY4541 EZ-PD CCG4 EVK installation.

   ```
   <Install_Directory>\CY4541 CCG4 EVK\1.0\Firmware
   ```

9. Select **NOTEBOOK** from the “select target” list shown in Figure 17. Select the firmware binary image 1 (CYPD4225-40LQXI_notebook_**one**_x_y_z_bb*_0_0_0_nb.cyacd) by clicking **Browse (…)** in the Firmware path 1 widget. Select the firmware binary image 2 (CYPD4225-40LQXI_notebook_**two**_x_y_z_bb*_0_0_0_nb.cyacd) by clicking **Browse (…)** in the Firmware path 2 widget. Click **Program**.

   Note*: Here, x_y_z_bb refers to the firmware version and build number.

Figure 17. Selection of DRP-NOTEBOOK from EZ-PD Configuration Utility

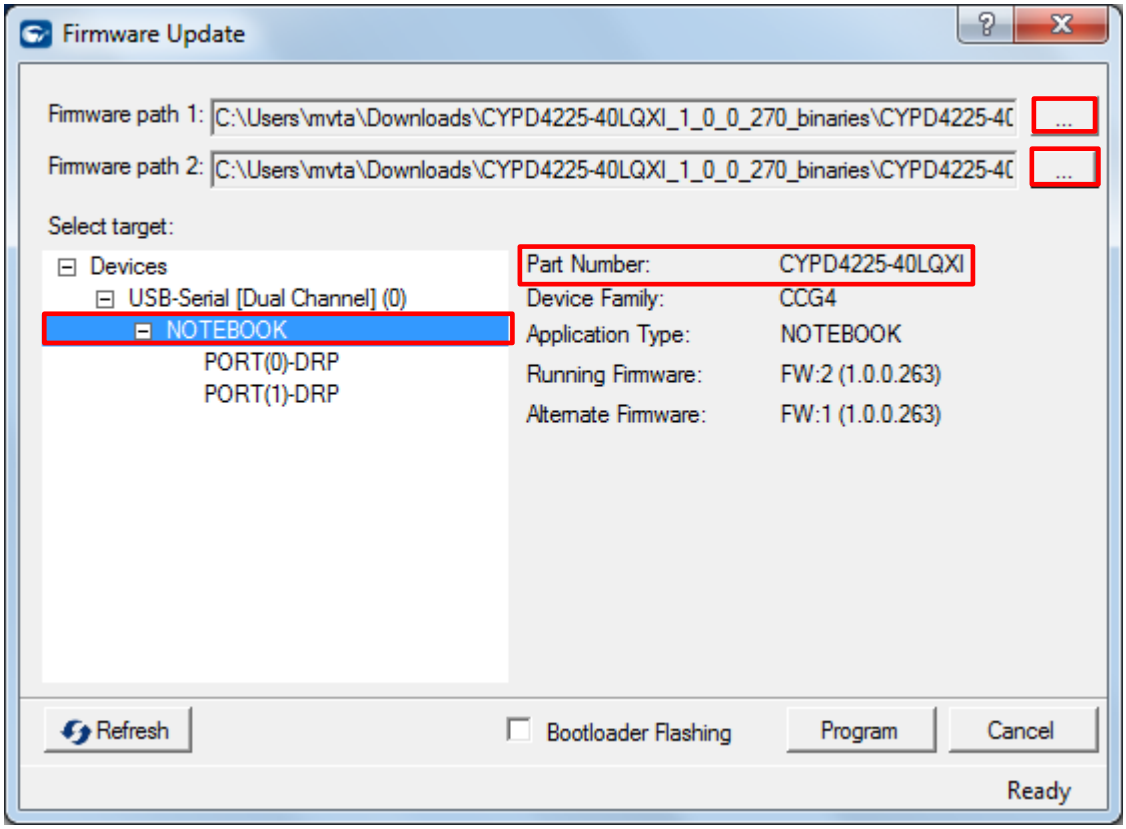

10. Press switch SW1 (XRES) on CY4541 CCG4 daughter card to reset the CCG4 device.

11. Firmware for the CCG4 device is provided in *.cyacd* format. Sample firmware binaries for each application are provided on the CY4541 EZ-PD CCG4 EVK webpage. The firmware update over I^2C will take few moments to complete. Progress messages are displayed in the Messages window and a progress bar indicates the progress of the firmware update process. The old and new firmware versions are displayed in the Messages window at the end of a successful firmware update process.

12. The CCG4 device can also be programmed with a hex file using SWD header J4 on the CY4541 CCG4 daughter card. MiniProg3 (not provided with the kit) is required to perform SWD programming. Refer to the Knowledge Base Article 96477 for more details.

    Warning: Do not disconnect the EVK from the PC while the firmware update is in progress.

6. Kit Operation

This chapter describes how to configure the CY4541 EZ-PD CCG4 EVK to demonstrate the operation and functionality of the CCG4 as a DRP device. It demonstrates that each Type-C port of a DRP device can act as a power provider or a power consumer. It also provides details about connecting a USB host (PC) to either a device (USB pen drive/display monitor) or a USB Type-C power adapter through the CY4541 EZ-PD CCG4 EVK board.

This chapter provides details of the following demos:

a. DRP and SuperSpeed USB demo – This demo shows the ability of CCG4 to control two Type-C ports simultaneously. In this demo, both Type-C ports act as power providers.

b. Dead Battery Charging demo – This demo shows the ability of CCG4 to consume power from a USB Type-C power adapter when the external DC power supply is absent. This demonstrates a dead battery notebook, which can be powered by connecting the USB Type-C power adapter to its Type-C port.

c. DisplayPort Alternate Mode demo -- This demo shows the ability of CCG4 to transfer DisplayPort signals to a display monitor over the Type-C interface.

Before starting with the demos, let us understand power supply system of the CY4541 EZ-PD CCG4 EVK in detail.

6.1 Power Supply Connections

A PC with two USB 3.0 ports and a DisplayPort, along with the CY4541 EZ-PD CCG4 EVK, is equivalent to a PD-enabled dual Type-C port PC as shown in Figure 18. In a real Type-C notebook design, power from the power output header (J7) of the CCG EVK base board acting as the USB Type-C power adapter is connected to a Battery Charger Circuit (BCC) of a USB 3.0 notebook/PC. On the CCG4 EVK, the DC power jack (J1) on the CCG EVK base board is provided for demonstration purposes only since the internal supply from the Power Management IC (PMIC) is not available. A notebook power adapter (as shown in Figure 18) would be connected to the “ORing” controller block which supplies power to the Battery Charger Circuit (BCC).

In a real system, the power input header (J12) of CCG EVK base board 2 would be connected to the output of the PMIC. Since this tapping of power from the PMIC is not available in existing PCs, wires are directly connected between the power output and power input headers of CCG EVK base boards to mimic the Type-C notebook design using CY4541 EZ-PD CCG4 EVK.

Power being provided to the CCG4 EVK would come from a PMIC in the Notebook, and the input source to that PMIC could either be the notebook battery, a notebook power adapter or a USB Type-C power adapter. Hence, in a Notebook it is possible to connect both the DC power adapter and the USB Type-C power adapter. However, in the case of the CY4541 EZ-PD™ CCG4 EVK, since the internal power points to the Notebook are inaccessible, it is mandatory that power is not provided via the power jack J1 of either of the CCG EVK base boards when the CY4541 EZ-PD™ CCG4 EVK is powered by a USB Type-C power adapter (as shown in Figure 23 and Figure 24) as this can damage the EVK boards. This restriction is not due to a limitation on the CCG4 device, but only because of the inaccessibility of the internal power points inside a Notebook/PC.

Figure 18. Dual Type-C PC Design using CY4541 EZ-PD CCG4 EVK

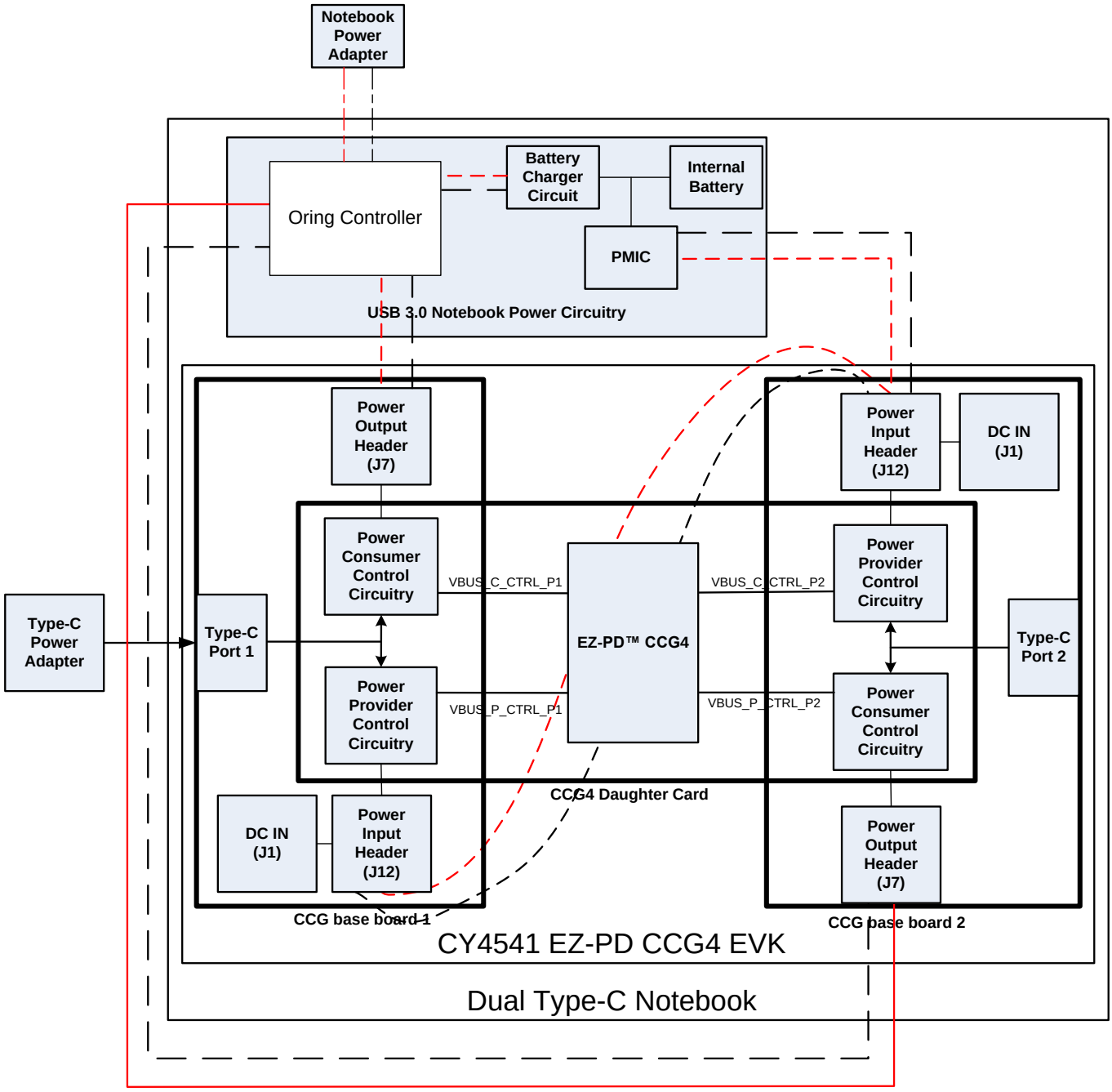

The CY4541 CCG4 daughter card consists of both a power provider and a power consumer circuitry for each Type-C port. The CCG4 device controls this circuitry and decides the source of the power for both CCG EVK base boards and the CY4541 CCG4 daughter card. The power input header on each CCG EVK base board can receive DC power directly. The power output header on the CCG EVK base board can receive and source power directly when a USB Type-C power adapter is connected to Type-C port 1 or 2. The CY4541 CCG4 daughter card receives power either from CCG EVK base board 1 or from CCG EVK base board 2 (whichever is higher).

In a CY4541 EZ-PD CCG4 EVK enabled dual Type-C PC design, the entire EVK can be powered using the following methods:

Scenario 1: A DC power adapter is connected to the DC power jack (J1) on CCG EVK base board 1 or CCG EVK base board 2

In this scenario, the CCG4 device turns on the power provider control circuitry and power is available on the power input headers. Wires must be connected between the power input headers (J12) on both the CCG EVK base boards (shown by the dotted line

in Figure 18). Both the CCG EVK base boards and the CY4541 CCG4 daughter card are powered by the DC Power supply connected to either CCG EVK base board 1 or CCG EVK base board 2.

Scenario 2: A USB Type-C power adapter is connected to Type-C port 1 or Type-C port 2

In this scenario, the CCG4 device turns on the power consumer control circuitry and power is available on the power output headers. Wires must be connected between the power output header (J7) of CCG EVK base board 1 and power input header (J12) of CCG EVK base board 2 when a USB Type-C power adapter is connected to Type-C port 1. If a USB Type-C power adapter is connected to Type-C port 2, then the wires must be connected between the power output header of CCG EVK base board 2 and the power input header of CCG EVK base board 1.

6.1.1 Valid Power Supply Connections

This section shows the four valid power supply connections between the power output and power input headers on the CCG EVK base boards.

Case 1: This case refers to Scenario 1 when the DC power supply is connected to DC power jack (J1) of CCG EVK base board 1. Wires must be connected between the power input header (J12) of CCG EVK base board 1 and the power input header (J12) of CCG EVK base board 2, as shown in Figure 19.

Figure 19. Valid Power Supply Connections for Case 1

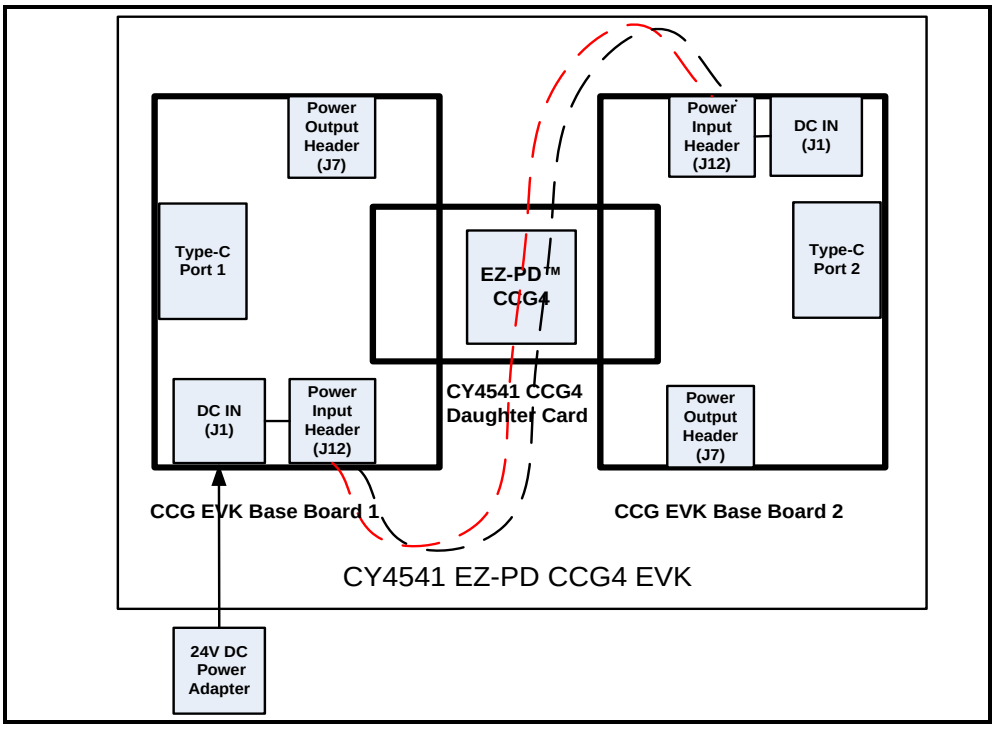

Case 2: This case refers to Scenario 1 when a DC power supply is connected to DC power jack (J1) of CCG EVK base board 2. Wires must be connected between the power input header (J12) of CCG EVK base board 1 and the power input header (J12) of CCG EVK base board 2, as shown in Figure 20.

Figure 20: Valid Power Supply Connections for Case 2

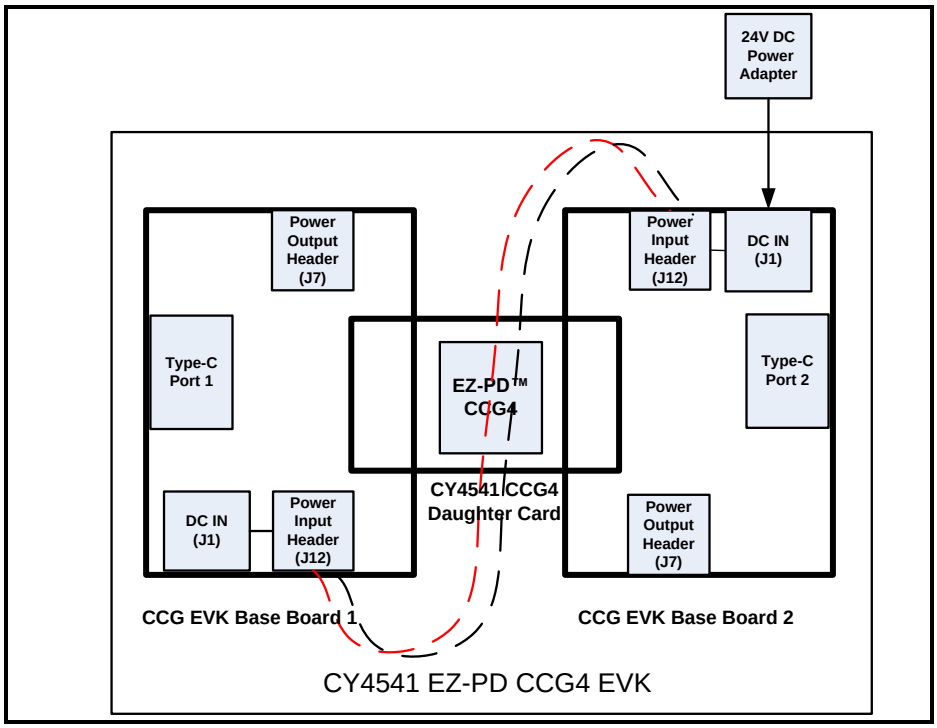

Case 3: This case refers to Scenario 2 when the USB Type-C power adapter is connected to Type-C port 1. Wires must be connected between the power output header (J7) of CCG EVK base board 1 and the power input header (J12) of CCG EVK base board 2 as shown in Figure 21.

Figure 21: Valid Power Supply Connections for Case 3

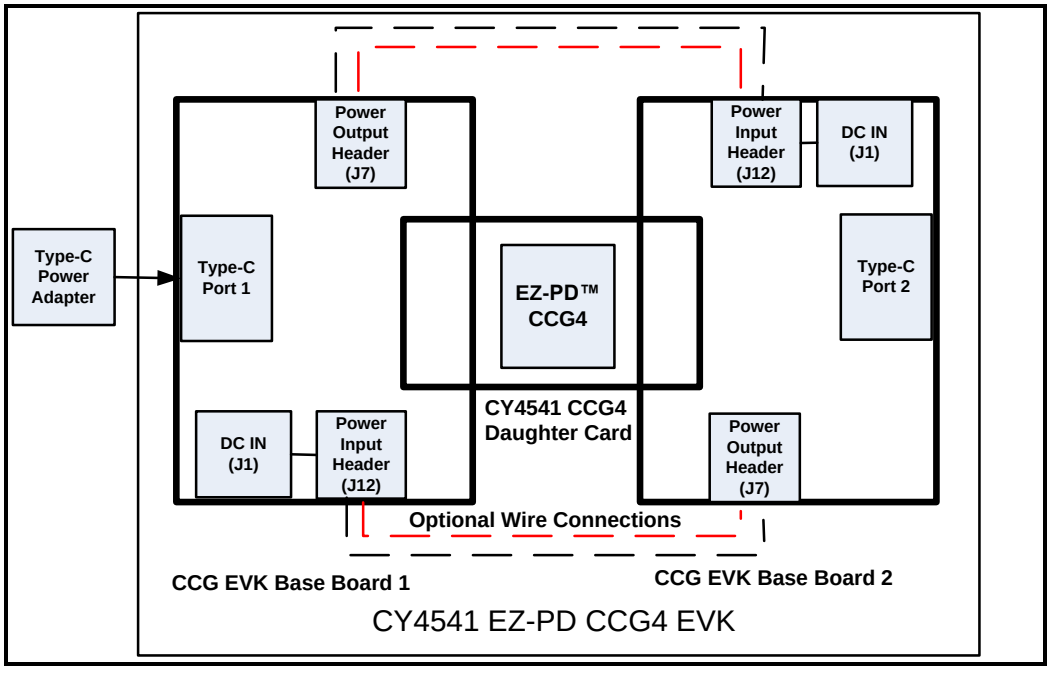

Case 4: This case refers to Scenario 2 when a USB Type-C power adapter is connected to Type-C port 2. Wires must be connected between the power input header (J12) of CCG EVK base board 1 and the power output header (J7) of CCG EVK base board 2, as shown in Figure 22.

Figure 22. Valid Power Supply Connections for Case 4

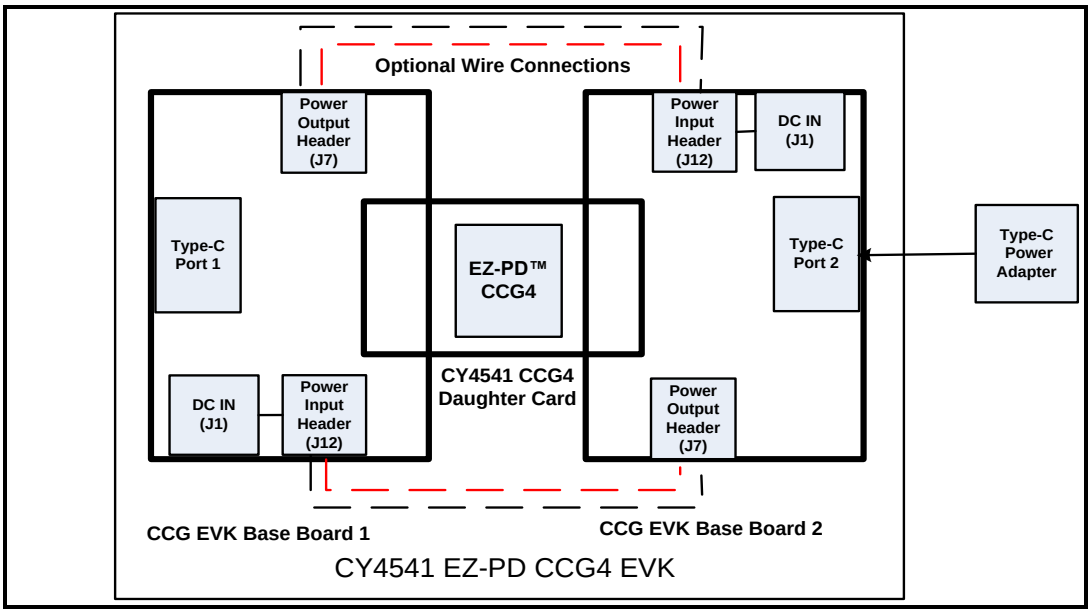

6.1.2 Invalid Power Supply Connections

This section shows the two invalid power supply connections between the power output and power input headers on the CCG EVK base boards.

Caution: Connecting the DC power adapter with the wire connections based on any of the invalid cases described in this section will damage the EVK or its accessories.

Case 1: Figure 23 illustrates an invalid power supply connection as described below when:

- A DC power adapter is connected to DC power jack (J1) of CCG EVK base board 1
- Wires are connected between the power input header (J12) of CCG EVK base board 1 and the power output header (J7) of CCG EVK base board 2

Figure 23. Invalid Power Supply Connections for Case 1

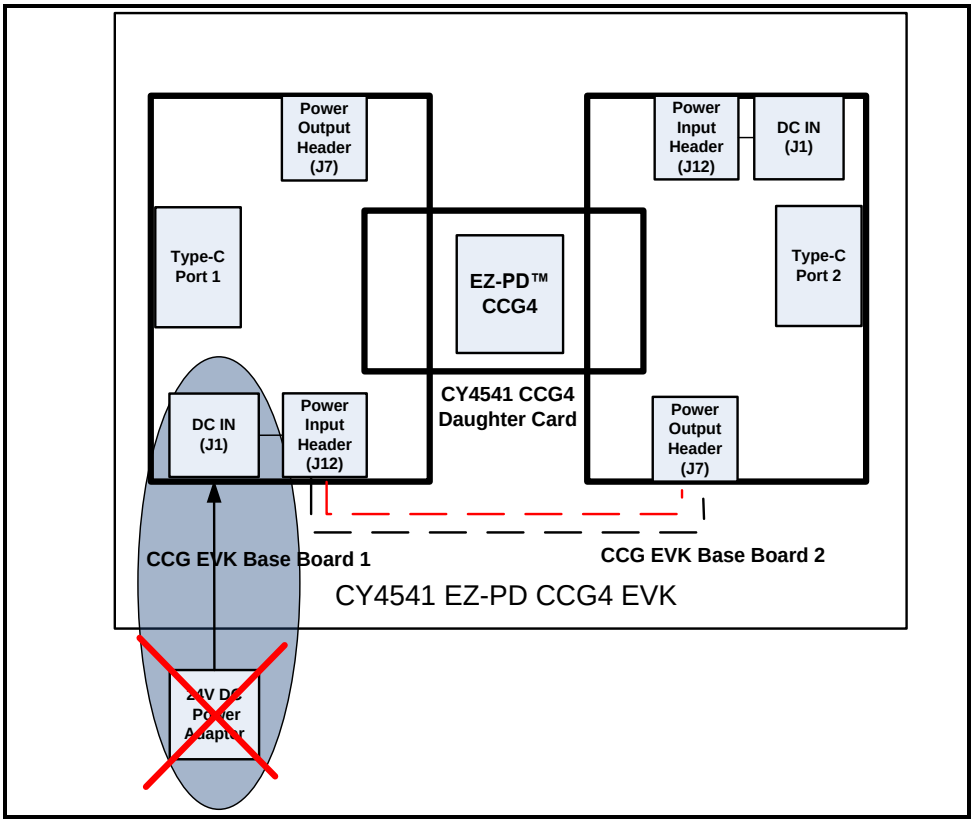

Case 2: Figure 24 illustrates an invalid power supply connection as described below:

- A DC power adapter is connected to the DC power jack (J1) of CCG EVK base board 2
- Wires are connected between the power output header (J7) of CCG EVK base board 1 and the power input header (J12) of CCG EVK base board 2

Figure 24. Invalid Power Supply Connections for Case 2

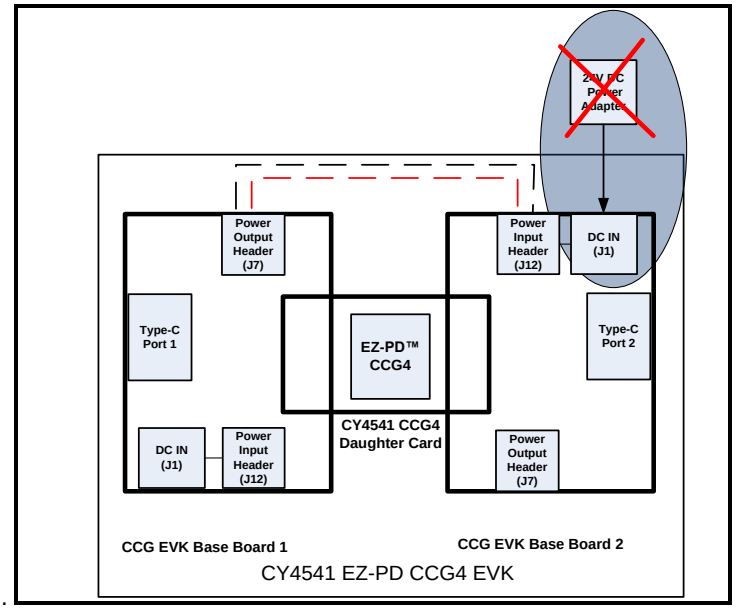

6.1.3 Non Recommended Power Supply Connections with Custom Firmware

This section shows the three non-recommended power supply connections, if CY4541 EZ-PD CCG4 EVK is programmed with custom firmware, which enables both power provider and power consumer path circuitry simultaneously. Default firmware in CY4541 EZ-PD CCG4 EVK does not enable both provider and consumer paths at the same time, which allows the following power supply connections with pre-programmed CY4541 EZ-PD CCG4 EVK.

Note: While modifying the firmware of CCG4 device, care should be taken to not enable the power provider and power consumer path of CCG4 at the same time.

Case 1: Figure 25 illustrates non-recommended power supply connection as described below:

- A USB Type-C power adapter is connected to Type-C port 1 or Type-C port 2 when a DC power adapter is connected to DC power jack (J1) of the CCG EVK base board 1
- Wires are connected between power input headers (J12) of CCG EVK base board 1 and CCG EVK base board 2

Figure 25. Non-Recommended Power Supply Connection for Case 1

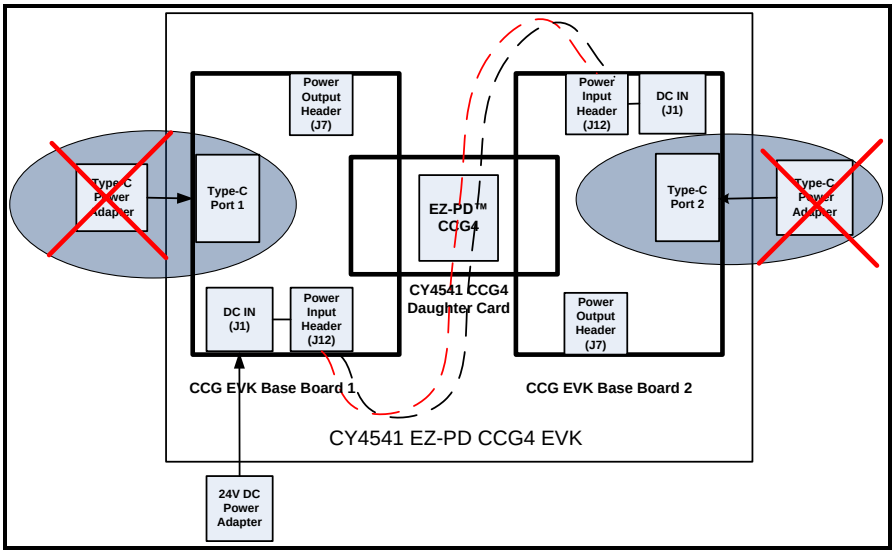

Case 2: Figure 26 illustrates non-recommended power supply connection as described below:

- A USB Type-C power adapter is connected to Type-C port 1 or Type-C port 2 when a DC power adapter is connected to the DC power jack (J1) of CCG EVK base board 2
- Wires are connected between the power input headers (J12) of CCG EVK base board 1 and CCG EVK base board 2

Figure 26. Non-Recommended Power Supply Connection for Case 2

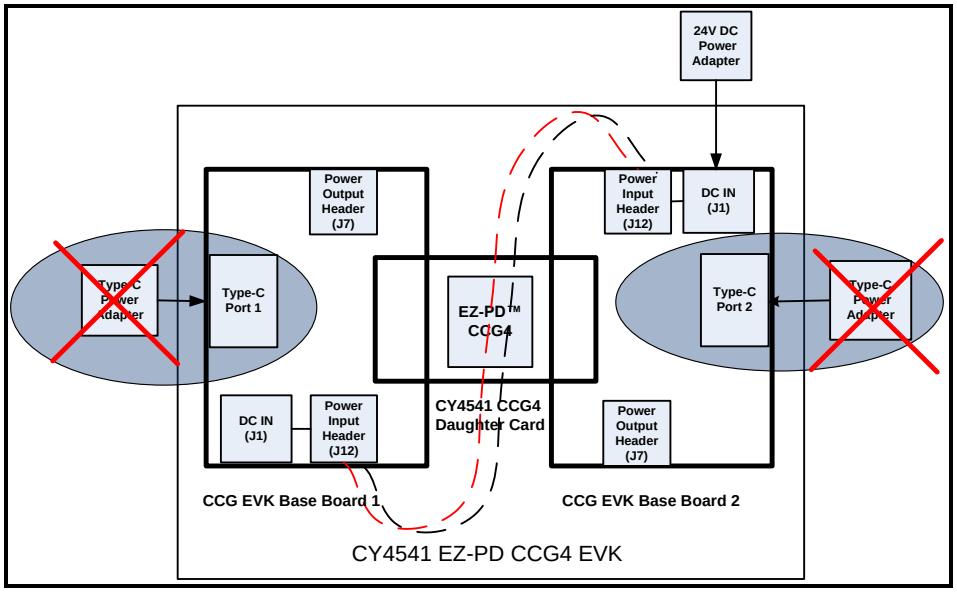

Case 3: Figure 27 illustrates non-recommended power supply connection as described below:

- A USB Type-C power adapter is connected to both Type-C port 1 and Type-C port 2
- Wires are connected between the power input header (J12) of CCG EVK base board 1 and the power output header (J7) of CCG EVK base board 2 as well as between the power output header (J7) of CCG EVK base board 1 and the power input header (J12) of CCG EVK base board 2

Figure 27: Non-Recommended Power Supply Connection for Case 3

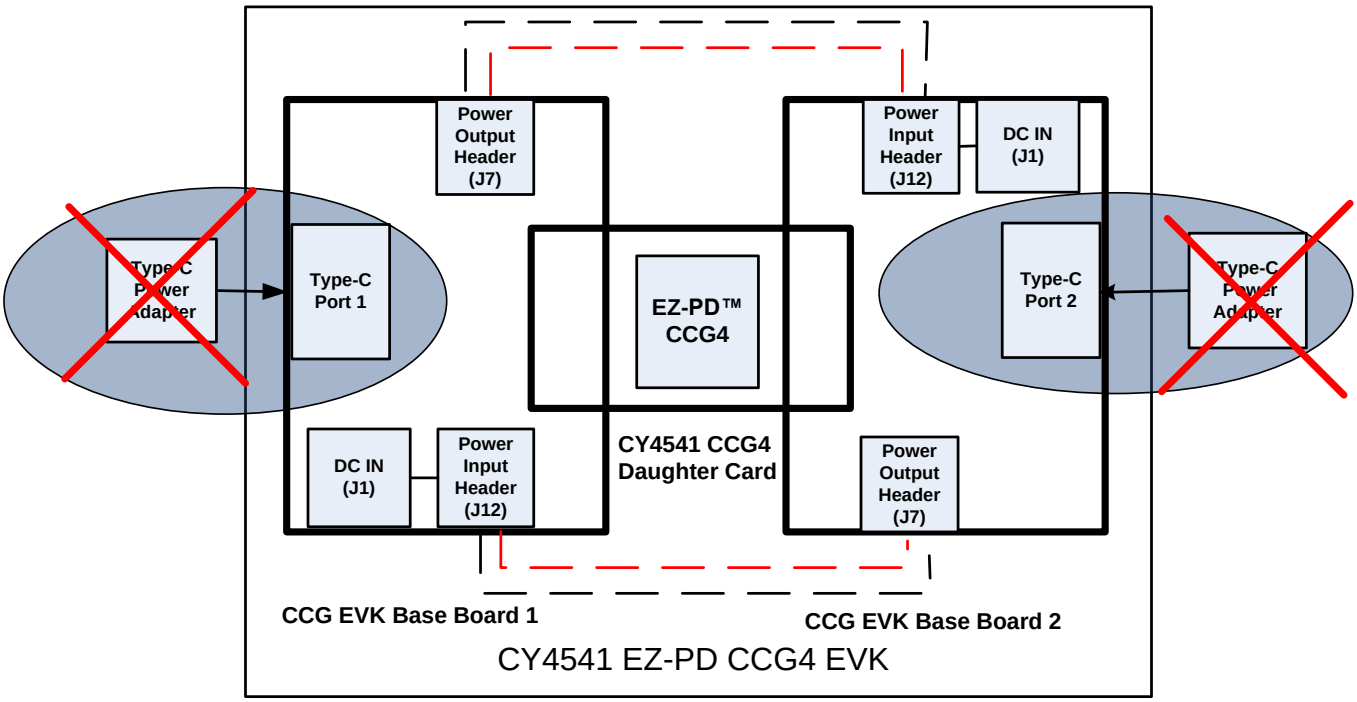

6.2 Dual Role Port (DRP) and SuperSpeed USB Demo

The DRP and SuperSpeed USB demo is a full end-to-end demo that demonstrates the following:

- Type-C connectivity between the Downstream Facing Port (DFP)* (such as a USB host) and Upstream Facing Port (UFP)* (such as a USB device - for example, a SuperSpeed USB pen drive).
- The ability of CCG4 to switch the power role from provider to consumer and vice-versa (Dual Role Port device) on each Type-C port

*Note that the DFP is a Type-C port, which by default is a USB host and power source. The UFP is by default a USB device and power sink. DRP can switch its power role from source to sink.

6.2.1 Boards, Cables, and Accessories

The following items are needed to perform this demo:

- A USB host device (for example, a PC with USB host controller and port)
- CY4541 EZ-PD CCG4 EVK setup (CCG EVK base board and daughter card, refer to Section 4.3 and Section 4.4 for more information)
- Two SuperSpeed USB Type-A to Type-B cables
- Two USB Type-C to Type-A adapters
- USB Type-C power adapter (not provided with the kit; refer to the recommended hardware section)
- Two USB pen drives (not provided with the kit)

6.2.2 Running the DRP SuperSpeed USB Demo

A PD-enabled Type-C PC (here, the USB host PC and CY4541 EZ-PD CCG4 EVK) operates as a power provider and a power consumer on each Type-C port. The Type-C Specification calls this a DRP device. CCG4 has the ability to switch its power role from provider to consumer and vice-versa.

CCG4 as Power Provider for both Type-C Ports:

1. Use the CY4541 EZ-PD CCG4 EVK setup (assembled CCG EVK base board and CY4541 CCG4 daughter cards) as shown in Figure 28.
2. Connection details:
   - Verify that the User LED jumper (J11) is populated on CCG EVK base board 1 and the voltage selection jumper (J5) on the CY4541 CCG4 daughter card is set to 3.3 V (in position 1-2). By default, the User LED jumper (J11) on CCG EVK base board 2 is populated. This jumper (J11) on CCG EVK base board 2 is optional.
   - Ensure that the wires are connected between the power input headers (J12) of both CCG EVK base boards as shown in Figure 28.
   - Connect the DC power adapter (provided with the kit) to the DC power jack (J1) of either of the CCG EVK base boards.
   - Verify that the setup is as shown in Figure 28. LED1 (Green) on the CY4541 CCG4 daughter card and both the CCG EVK base boards glow to indicate that the kit is powered. Also, LED2 (Orange) on CCG EVK base board 1 blinks continuously to indicate that CCG4 is powered and active.

Figure 28. Power Supply Connections

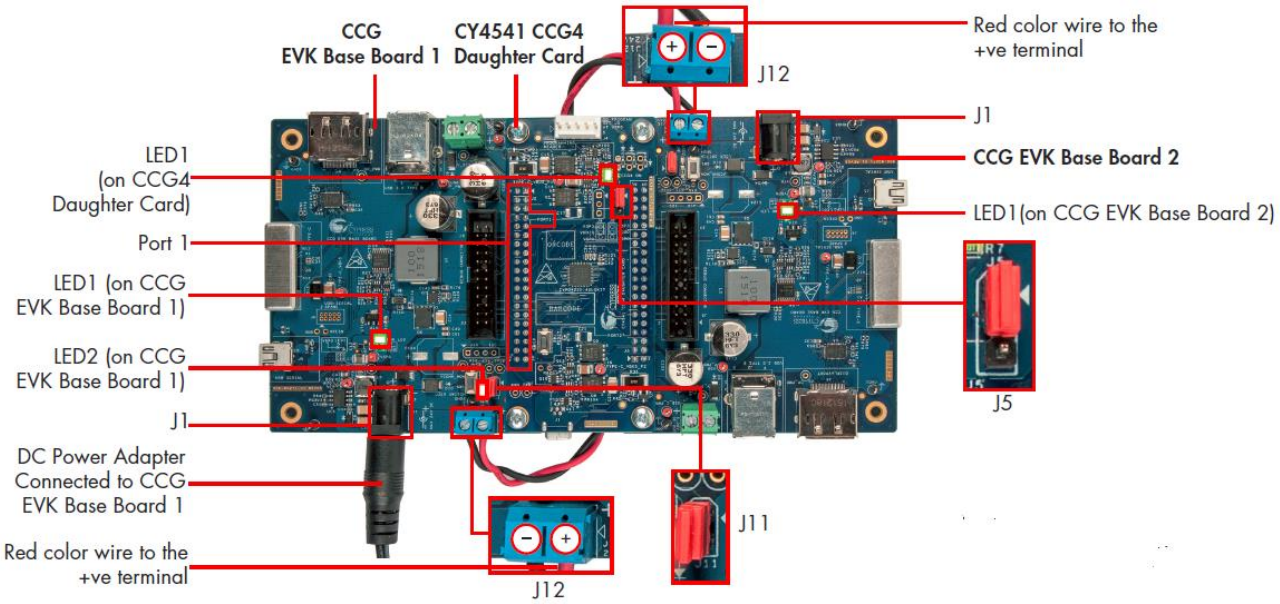

3. Connect the boards and cables (USB 3.0 Type-A to Type-B Cables and USB Type-C to Type-A adapters) as shown in Figure 29. Note that the USB Type-C to Type-A adapters (provided with the kit) and the color of the solder mask of both CCG EVK base boards and the CY4541 CCG4 daughter card may vary from the image shown in Figure 29. Plug USB pen drives (not provided with the kit) into each USB Type-C to Type-A adapter.

Figure 29. Setup of SuperSpeed USB Demo Using the CY4541 EZ-PD CCG4 EVK

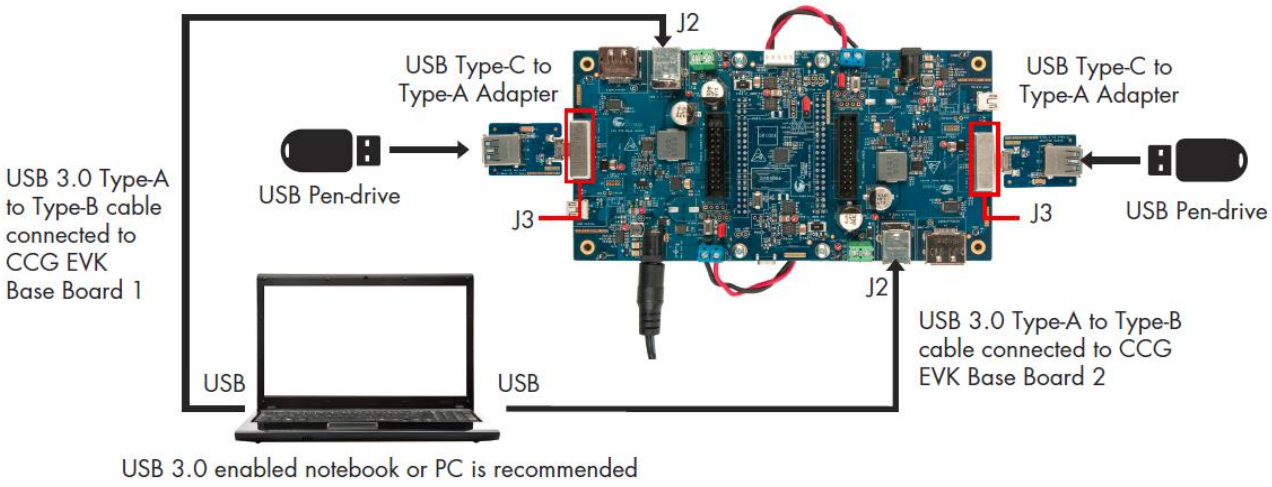

4. Observe that both the USB pen drives connected to the USB Type-C to Type-A adapters enumerate on the PC that is plugged into the CY4541 EZ-PD CCG4 EVK. Verify the functionality by accessing (adding/deleting) files on the connected USB pen drives through the PC. This demonstrates CCG4's capability to control two Type-C interfaces simultaneously.

CCG4 as a DRP device on both Type-C ports and Dead Battery Charging demo:

A PC with two USB 3.0 ports and a DisplayPort along with the CY4541 EZ-PD CCG4 EVK is equivalent to a PD-enabled dual Type-C port PC

1. Connection details:

- Remove the DC power adapter from the DC power jack (J1).
- Remove the wires from the power input header (J12) of CCG EVK base board 1. Connect wires between the power output header (J7) of CCG EVK base board 1 and the power input header J12 of CCG EVK base board 2. This connection provides power from CCG EVK base board 1 to CCG EVK base board 2 when a USB Type-C power adapter is connected to CCG EVK base board 1, as shown in Figure 30. Connect wires between the power output header J7 of CCG EVK base board 2 and the power input header J12 of CCG EVK base board 1, as shown in Figure 30. This wire connection provides power from CCG EVK base board 2 to CCG EVK base board 1 when a USB Type-C power adapter is connected to CCG EVK base board 2.
- Make sure that a DC power adapter is not connected to J1 as this will damage the board in this power configuration. Connecting a DC power adapter to Type-C port 1 or Type-C port 2 bypasses the regulator and supplies power directly to the attached Type-C device.
- Disconnect the USB pen drive from the USB Type-C to Type-A adapter connected to CCG EVK base board 1.

Figure 30. Setup of DRP and Dead Battery Charging Demo (Example 1)

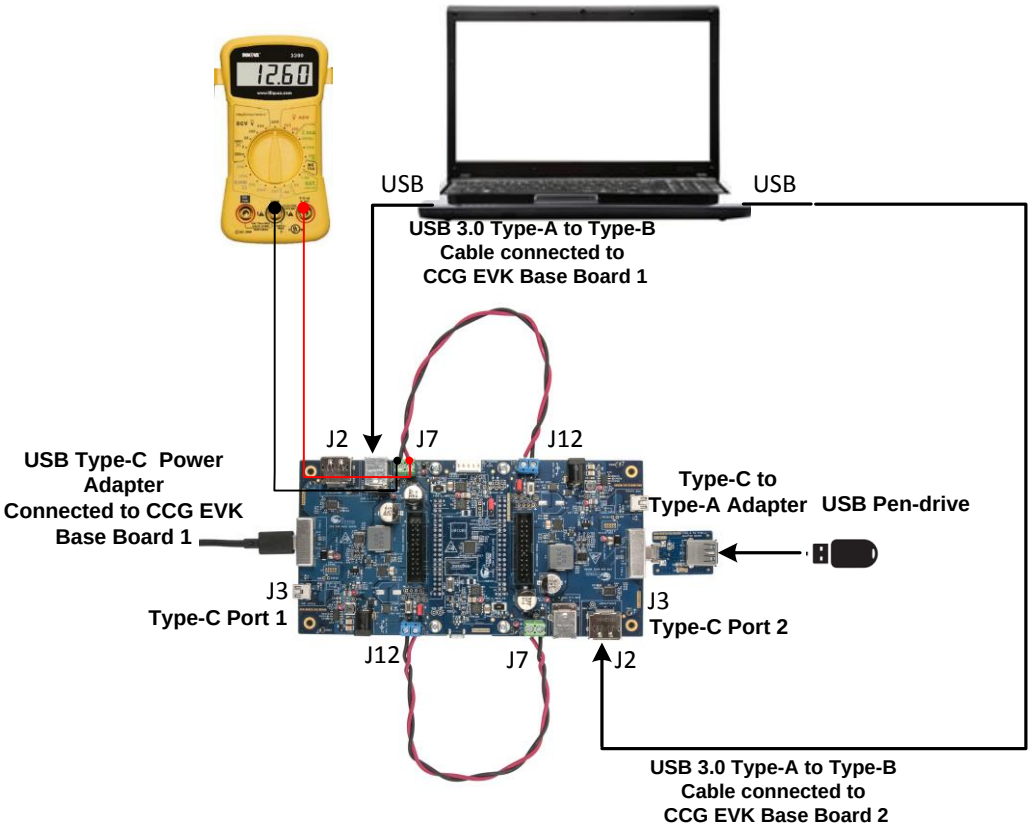

2. Because a DC power adapter is not connected to the EVK, the onboard CCG4 is not powered. This emulates a dead battery dual Type-C notebook. The CCG4 can be powered by connecting a USB Type-C power adapter to one of the EVK's Type-C ports as shown in Figure 30. Connect a USB Type-C power adapter that supports a 14-V to 20-V power profile (not provided with the kit; refer to the recommended hardware section) to Type-C port 1. Verify your setup as shown in Figure 30. Note that the connection of wires between the power output header (J7) of CCG EVK base board 1 and the power input header (J12) of CCG EVK base board 2 is mandatory as current flows from CCG EVK base board 1 to CCG EVK base board 2 when the USB Type-C power adapter is connected to Type-C port 1. Also, the connection of the USB 3.0 Type-A to Type-B Cable to SuperSpeed USB Type-B connector (J2) of CCG EVK base board 2 is mandatory when the USB pen

drive is connected to Type-C port 2. LED1 (Green) on the CY4541 CCG4 daughter card and both the CCG EVK base boards glow to indicate that the kit is powered. The LED2 (Orange) on CCG EVK base board 1 blinks continuously to indicate that CCG4 is powered and active. When the CCG4 on the EVK is powered, it establishes a power contract with the USB Type-C power adapter and starts consuming power. This can be verified by connecting a multimeter to the power output header (J7) of the CCG EVK base board (where the USB Type-C power adapter is connected) to measure the output voltage in the dead battery charging scenario. The output voltage at the power provider header (J7) is based on the power negotiation between the CCG4 device and the USB Type-C power adapter. Thus, it will vary with respect to the attached USB Type-C power adapter. This demonstrates that a CCG4-enabled dual Type-C notebook can be charged from the dead battery condition.

3. The CCG4 is now active and provides power to the UFP device (USB pen drive) connected to Type-C port 2. Observe the enumeration of the SuperSpeed USB pen drive on the PC. In this scenario, Type-C port 1 acts as a power consumer and Type-C port 2 acts as a power provider.
4. Interchange the connection of the USB Type-C to Type-A adapter and the USB Type-C power adapter between Type-C port 1 and Type-C port 2, as shown in Figure 31. Note that the connection of wires between the power input header (J12) of CCG EVK base board 1 and the power output header (J7) of CCG EVK base board 2 is mandatory as current flows from CCG EVK base board 2 to CCG EVK base board 1 when a USB Type-C power adapter is connected to Type-C port 2. Also, the connection of USB 3.0 Type-A to Type-B Cable to SuperSpeed USB Type-B connector (J2) of CCG EVK base board 1 is mandatory when the USB pen drive is connected to Type-C port 1.

Figure 31. Setup of DRP and Dead Battery Charging Demo (Example 2)

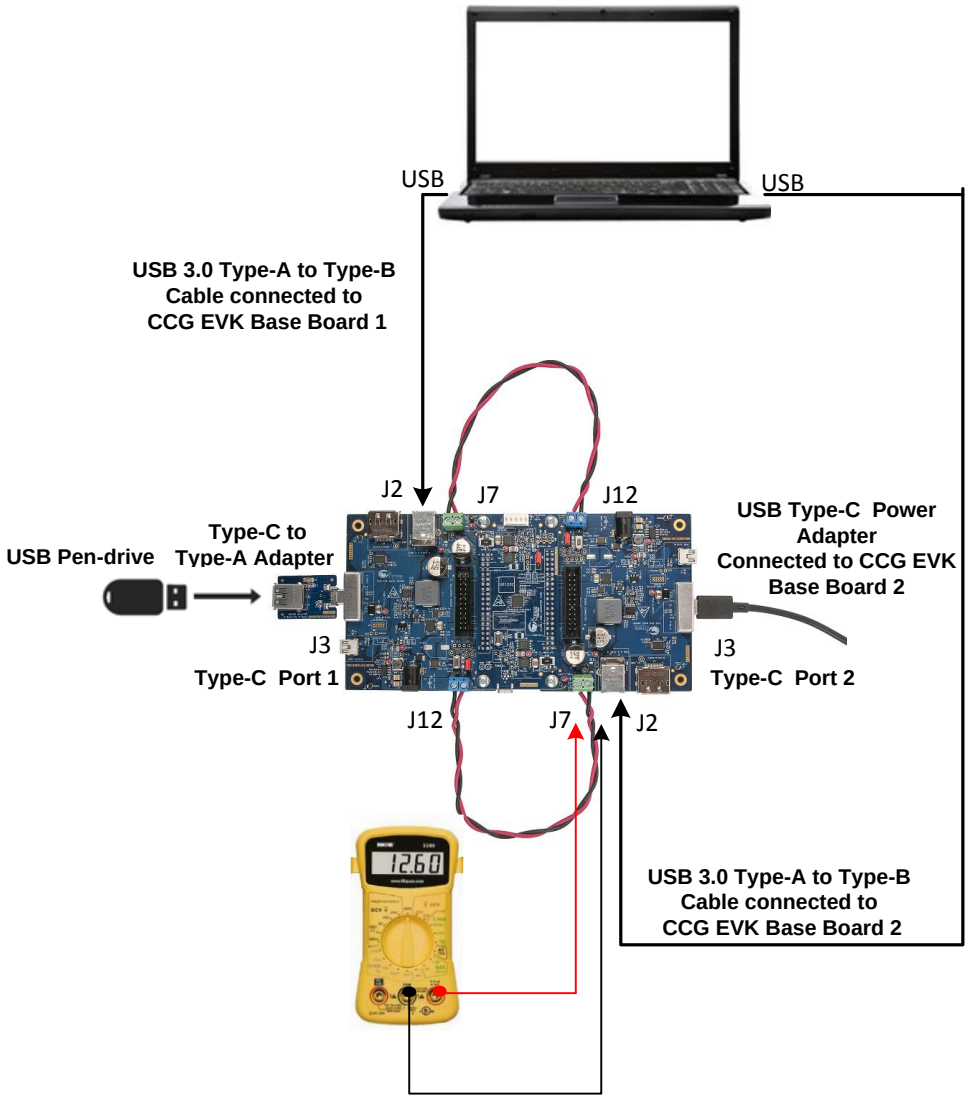

5. Repeat steps 2 and 3. In this scenario, Type-C port 1 acts as a power provider and Type-C port 2 acts as a power consumer. This demonstrates that the CCG4 device can switch the power role of the ports from provider to consumer and vice-versa.

6.2.3 Common Problems and Troubleshooting

If the demo does not function, follow these guidelines to troubleshoot:

1. Ensure that both the CCG EVK base boards and the CY4541 CCG4 daughter card are powered by verifying that LED1 (Green) on both the CCG EVK base boards and CY4541 CCG4 daughter card are ON.
2. Ensure that LED2 (Orange) on CCG EVK base board 1 is blinking continuously. If LED2 is not blinking, CCG4 is not active. Assert and release the reset button on the CY4541 CCG4 daughter card (SW1).
3. Ensure that CY4541 CCG4 daughter card is connected to both CCG EVK base boards.
4. If there is no voltage at jumper J7 (in the Dead Battery Charging demo), ensure that the connected USB Type-C power adapter supports a 14-V to 20-V power profile.

6.3 DisplayPort Demo

The DisplayPort Alternate Mode demo is an end-to-end demo that demonstrates the following:

- Type-C alternate mode support for display: Delivers the DisplayPort video from the host (in this case, a PC) to a display monitor.
- Dual Type-C alternate mode support for display: Delivers the DisplayPort video from the host (in this case, a PC) to display monitors connected to both Type-C port 1 and Type-C port 2.

6.3.1 Boards, Cables, and Accessories

The following items are needed to perform this demo:

- One DisplayPort video source (for example, a PC) with a DisplayPort output connector and DisplayPort Splitter board (not provided with the kit) or two DisplayPort video sources (two PCs with DisplayPort outputs or one PC with two DisplayPort outputs)
- Two DisplayPort monitors
- CY4541 EZ-PD CCG4 EVK (CCG EVK base board + CY4541 CCG4 daughter card, refer to Section 4.3 and Section 4.4 for more information)
- A DisplayPort cable that connects the CY4541 EZ-PD CCG4 EVK to the PC. If the PC has a Mini DisplayPort plug, use the Mini DisplayPort to DisplayPort cable (DisplayPort cables are not provided with the kit. See List of Recommended Hardware section)
- Type-C to DisplayPort, Type-C to HDMI, Type-C to VGA or Type-C to DVI dongle (not provided with the kit. See List of Recommended Hardware section)

6.3.2 Running the Single DisplayPort Demo

1. Use the default jumper settings shown in Figure 28 to configure the CY4541 EZ-PD CCG4 EVK.
2. Connection details:
   - Remove wires from the power output header (J7) on CCG EVK base board 1 and CCG EVK base board 2. Connect wires between the power input headers (J12) of both the CCG EVK base boards as shown in Figure 32. Note that this is the same setup as used in the DRP and SuperSpeed USB demo shown in Figure 28.
   - Connect the DC power adapter (provided with the kit) to the DC power jack (J1) of either of the CCG EVK base boards. LED1 (Green) on the CY4541 CCG4 daughter card, and both the CCG EVK base boards glow to indicate that the board is powered. Also, LED2 (Orange) on the CCG EVK base board 1 blinks continuously to indicate that CCG4 is powered and active.

3. Connect the boards, cables, and dongles as shown in Figure 32. Ensure that the monitor supports a DisplayPort, HDMI, VGA, or DVA interface.

Figure 32. Setup of the DisplayPort Demo

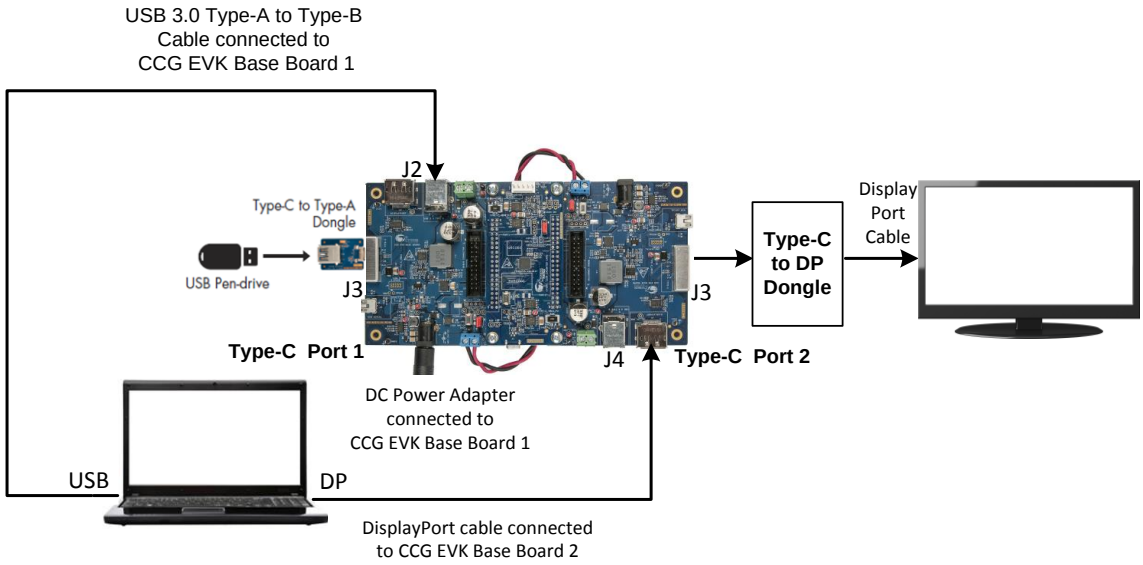

4. Ensure that the “Extended Display” feature is enabled in the USB host PC. For Windows users, this feature can be enabled by clicking **Extended Display**, available at “Control Panel\All Control Panel Items\Display\Connect to a Projector” window. For Linux or Mac users, this feature can be enabled by checking the **Mirror image** option, available at “System Preferences (or Settings)\Display”.
5. Observe that the DisplayPort video is transmitted from the host (PC) to the display monitor through Type-C port 2. This demonstrates the CCG4’s capability to control the transfer of DisplayPort data over the Type-C interface.
6. SuperSpeed USB data transfer can be performed simultaneously by connecting USB Type-C to Type-A adapter and USB pen-drive to Type-C port 1 as shown in Figure 32. Also, the connection of USB 3.0 Type-A to Type-B Cable to the SuperSpeed USB Type-B connector (J2) of CCG EVK base board 1 is mandatory when the USB pen drive is connected to Type-C port 1.

6.3.3 Running the Dual DisplayPort Demo

In this demo, CCG4 delivers a DisplayPort video from the host (PC) to display monitors connected to Type-C port 1 and Type-C port 2 using a Display Splitter board (not provided with the kit; refer to the List of Recommended Hardware section). If a Display Splitter board is not available, then the Dual DisplayPort demo can be performed by connecting two PCs having DisplayPort outputs, as shown in Figure 34. In this case, the DisplayPort output of PC 1 is connected to the DisplayPort connector of CCG EVK base board 1 and the DisplayPort output of PC 2 is connected to the DisplayPort connector of CCG EVK base board 2.

1. Use the default jumper settings shown in Figure 28 to configure the CY4541 EZ-PD CCG4 EVK.
2. Connection details:
   - Remove wires from the power output header (J7) on CCG EVK base board 1 and CCG EVK base board 2. Connect wires between the power input headers (J12) of both the CCG EVK base boards as shown in Figure 33. Note that this is the same setup as used in the DRP and SuperSpeed USB demo shown in Figure 28.
   - Connect the DC power adapter (provided with the kit) to the DC power jack (J1) of either of the CCG EVK base boards. LED1 (Green) on the CY4541 CCG4 daughter card and on both the CCG EVK base boards glow to indicate that the board is powered. Also, LED2 (Orange) on the CCG EVK base board, connected to Type-C port 1 of the CY4541 CCG4 daughter card, blinks continuously.

3. Connect the boards, cables, and dongles as shown in Figure 33 if a Display Splitter board is available. Otherwise, connect the boards to two PCs having DisplayPort outputs as shown in Figure 34. Ensure that the monitor used supports a DisplayPort, HDMI, VGA, or DVA interface.

Figure 33. Setup of the Dual DisplayPort Demo using a CY4541 EZ-PD CCG4 EVK and a Display Splitter Board

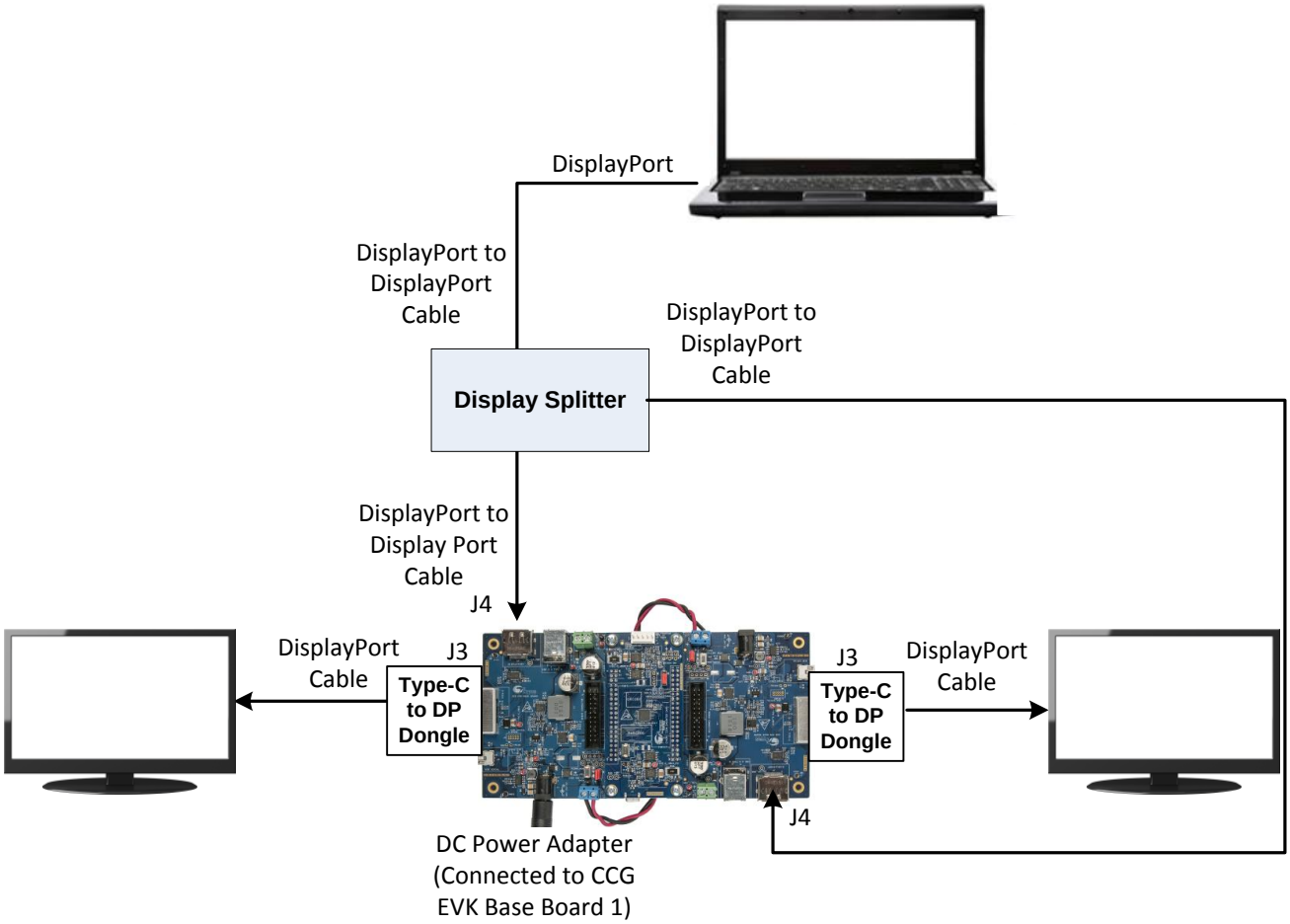

Figure 34. Setup of a Dual DisplayPort Demo using two PCs with DP output

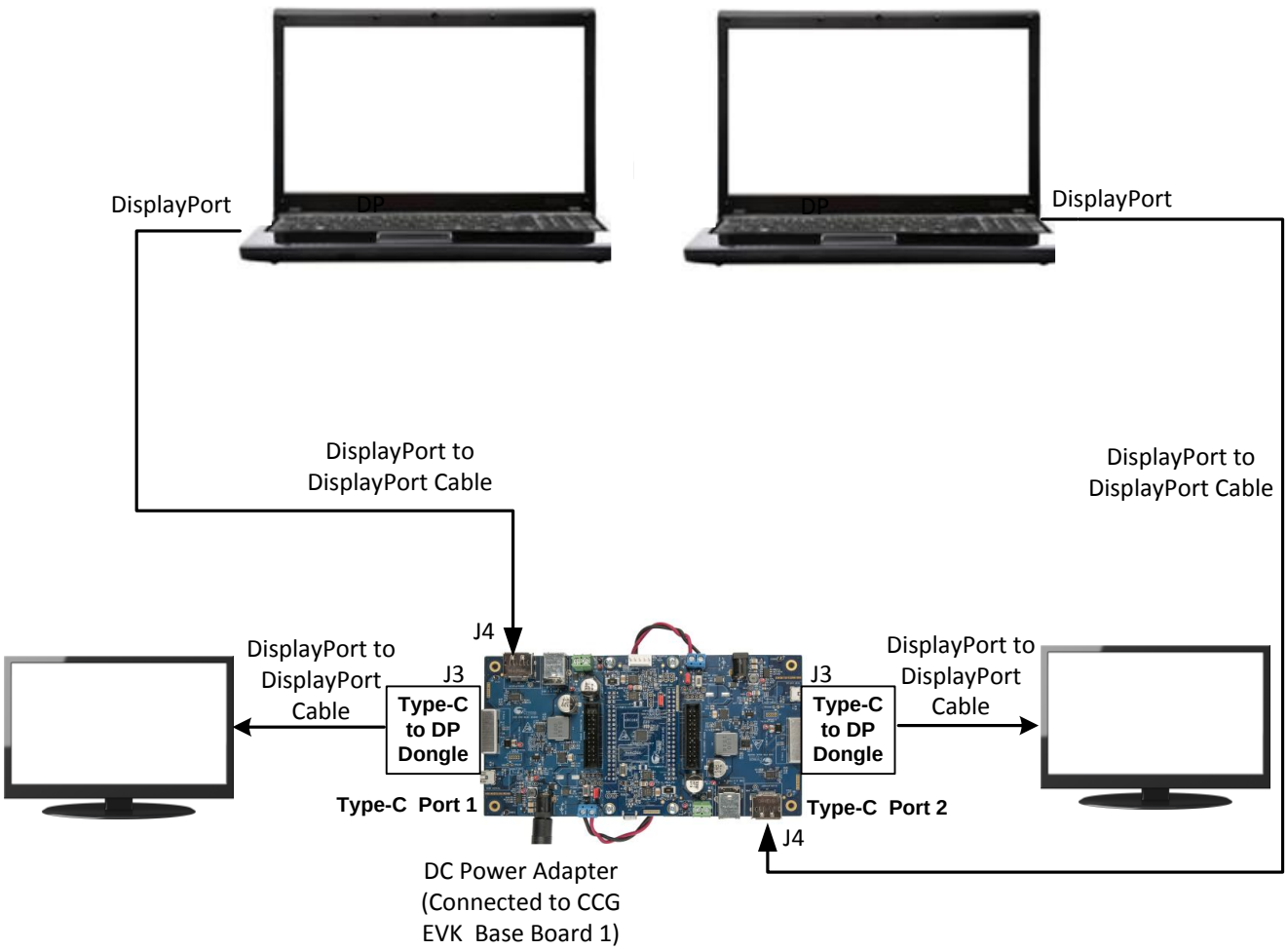

4. In the setup shown in Figure 33, the Display Splitter transfers the DisplayPort video from the host (PC) to the display monitors connected at Type-C port 1 and Type-C port 2 using Type-C to DP adapters. In the setup shown in Figure 34, this demonstrates CCG4's capability to control two DisplayPorts simultaneously.

6.3.4 Common Problems and Troubleshooting

If the demo does not function, follow these guidelines to troubleshoot.

1. Ensure that both CCG EVK base boards and the CY4541 CCG4 daughter card are powered by verifying that LED1 (Green) on all of the boards are ON.
2. Ensure that LED2 (Orange) of CCG EVK base board 1 is blinking continuously. If LED2 is not blinking, CCG4 is not active. Assert and release the reset button on the CY4541 CCG4 daughter card (SW1).
3. Ensure that the boards are powered before connecting the DisplayPort cables.
4. Ensure that the CY4541 CCG4 daughter card is connected to both the CCG EVK base boards.
5. Ensure that the "Extended Display" is enabled in the USB host PC.
6. If the PC video is not displayed on the monitor, assert and release the reset button on the CY4541 CCG4 daughter card (SW1).

Appendix A: Terminology

This guide assumes that the user of the CCG4 board is familiar with the fundamentals of Type-C connectivity and the USB Power Delivery protocol. A brief description of Type-C terms is provided here for reference.

- Alternate Modes: A feature of a USB Type-C system where one or both of the SuperSpeed lanes may be repurposed for use with a different serial protocol, such as a DisplayPort, eSATA, or Thunderbolt.
- Client: A USB peripheral such as a hub, docking station, or monitor.
- Configuration channel (CC): A USB Type-C bus wire used to transmit protocol signals. This is a half-duplex 300-kHz signal.
- Consumer: A Type-C port that sinks power from VBUS.
- DisplayPort: A digital display interface standard developed by the Video Electronics Standards Association. It is used primarily to connect a video source to a display such as a computer monitor.
- Downstream facing port (DFP): A USB Type-C port on a host or a hub to which devices are connected and a default power source.
- Dp, Dn: USB Type-C bus wires used to transmit and receive USB 2.0 data.
- Dual-role port: A USB Type-C port that can operate as either a DFP or a UFP, and either as power provider or power consumer.
- Electronically Marked Cable Assembly (EMCA): A USB cable that includes an IC that reports cable characteristics (such as current rating) to the Type-C ports.

Figure 35: USB Type-C Plug and receptacle

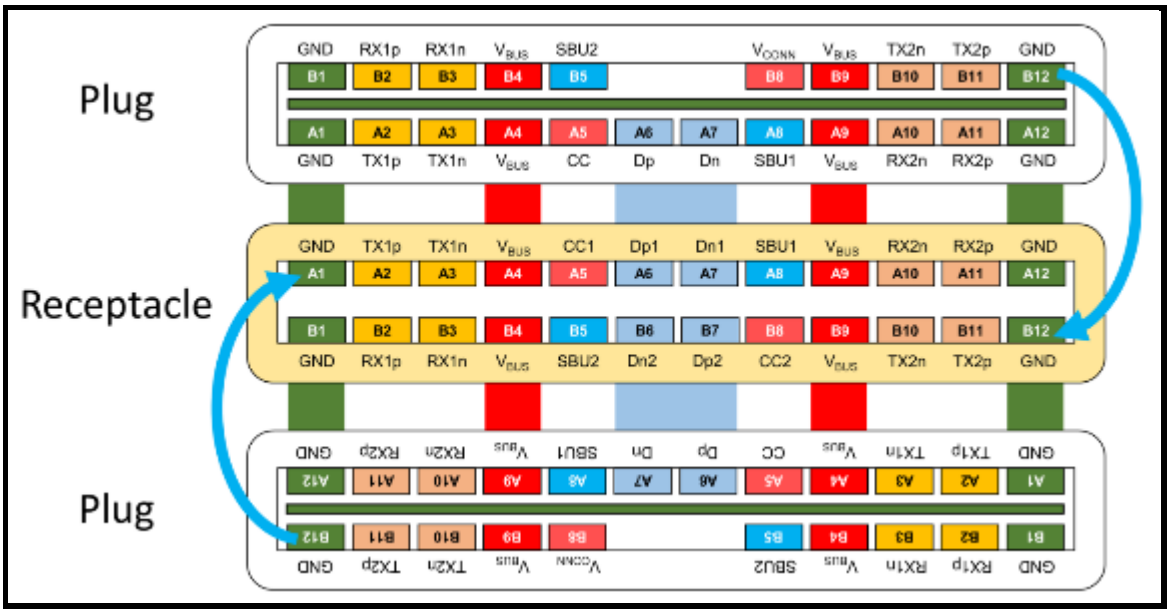

- Host: A USB host system such as a PC.
- Provider: A Type-C port that sources power over VBUS.
- Sideband use (SBU): A USB Type-C bus wire used for non-USB control signals, such as DisplayPort control signals.
- Type-C Transceiver: A transmitter/receiver that communicates over the CC.
- TX1p, TX1n, RX1p, RX1n, TX2p, TX2n, RX2p, and RX2n: USB Type-C bus wires used to transmit and receive SuperSpeed USB and PCIe or DisplayPort data.
- Upstream facing port (UFP): A USB Type-C port on a device or a hub that connects to a host or the DFP of a hub and a default power sink.
- USB Power Delivery (USB PD, PD): A new USB standard that increases power delivery over USB from 7.5 W to 100 W.
- USB Type-C (Type-C): A new standard with a slimmer USB connector and a reversible cable, capable of sourcing up to 100 W of power and supporting Alternate Modes.
- VBUS: A USB Type-C bus wire used for power; initially 5 V, but increased up to 20 V on USB PD systems.
- VCONN: A USB Type-C bus wire used to power the IC in the EMCA.

Appendix B: Schematic and Bill Of Materials

B.1 CY4541 CCG4 Base Board Schematic (Rev5* CCG EVK Base board)

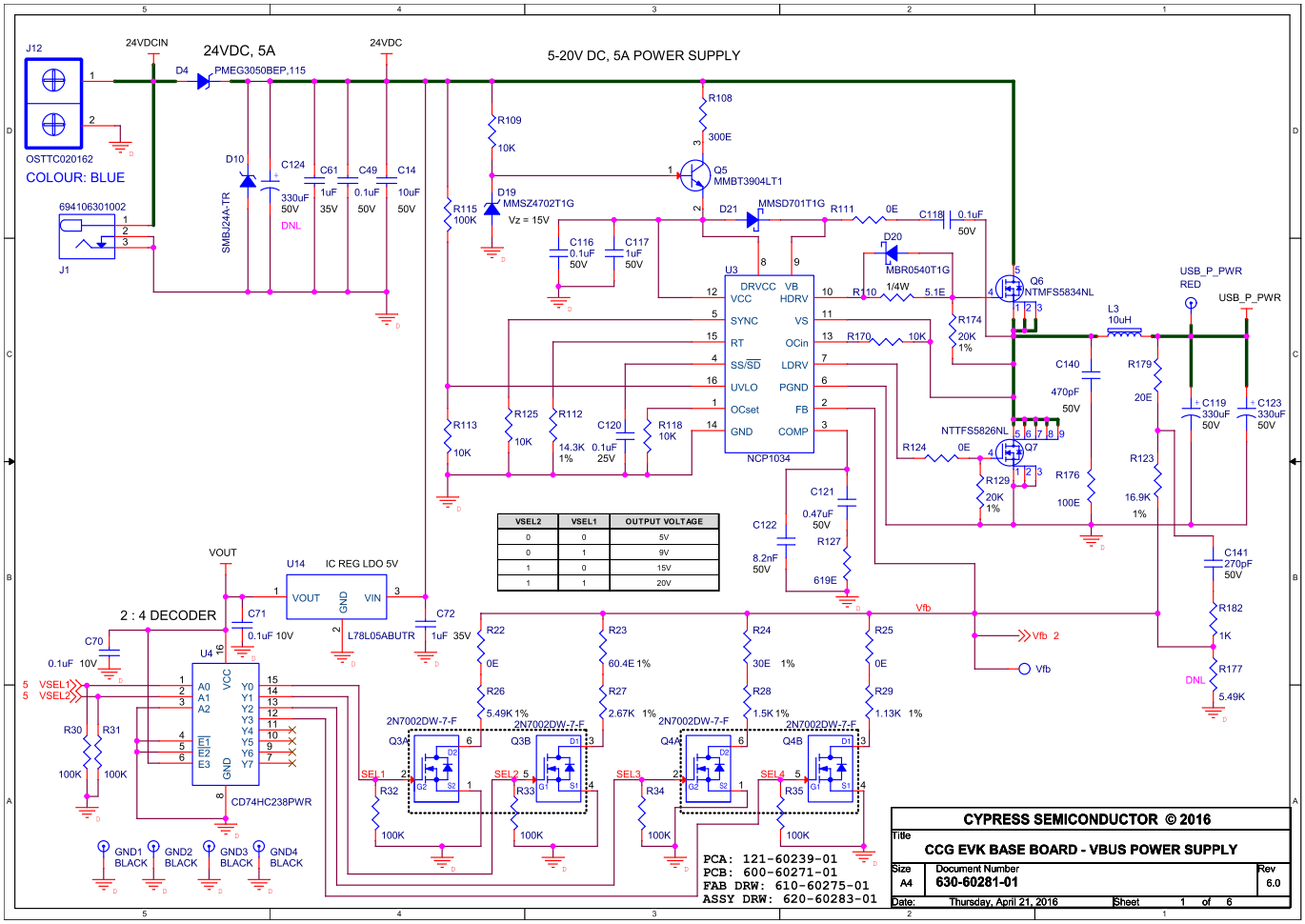

Note*: Rev5 denotes the revision number of a CCG EVK base board PCB as shown in Figure 13.

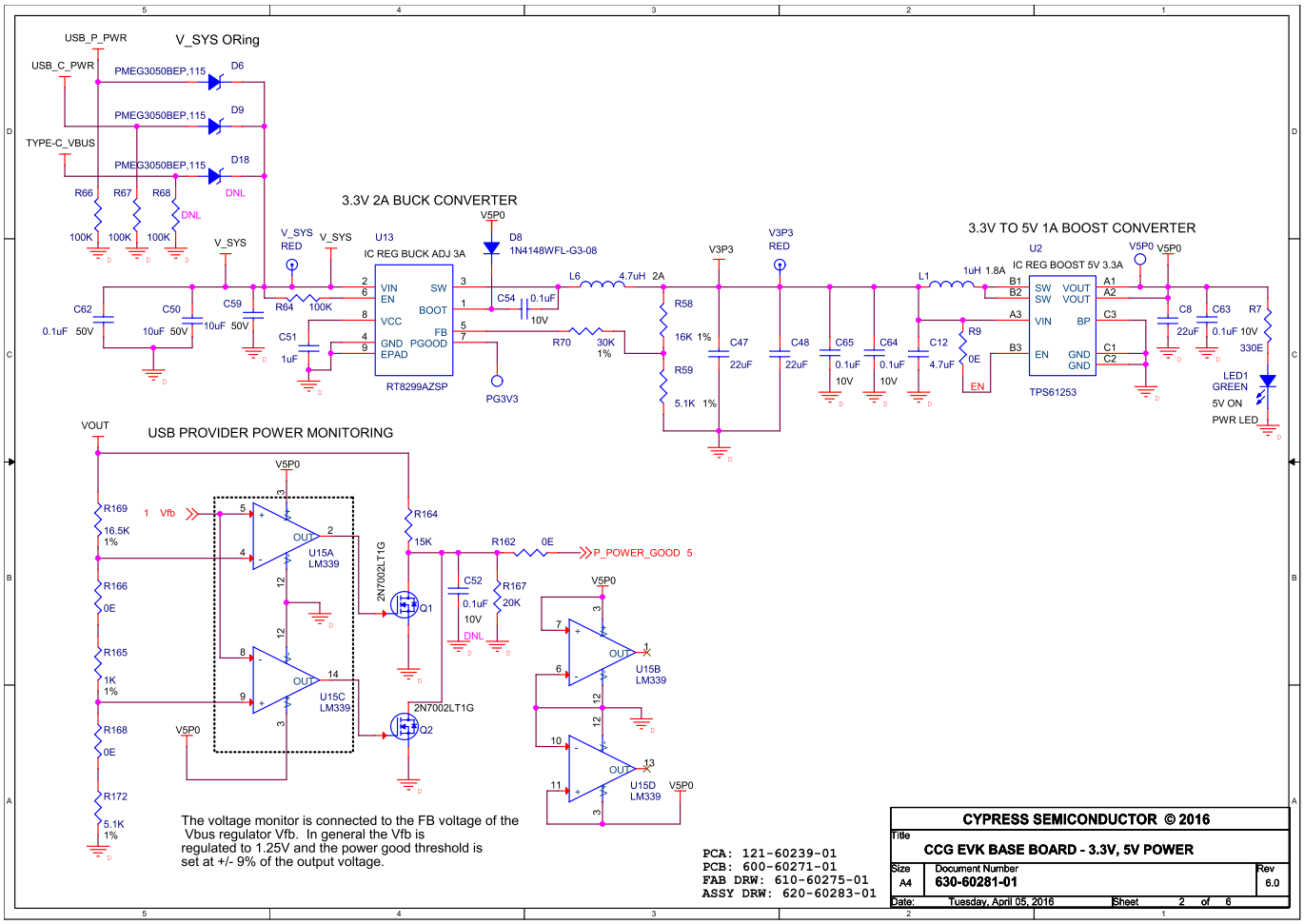
V_SYS ORing
USB_P_PWR
USB_C_PWR
TYPE-C_VBUS
PMEG3050BEP,115
D6
D9
D18
DNL
R66
R67
R68
100K
3.3V 2A BUCK CONVERTER
V5P0
D8
1N4148WFL-G3-08
V_SYS
V_SYS RED
U13
IC REG BUCK ADJ 3A
VIN
EN
VCC
GND
EPAD
SW
BOOT
FB
PGOOD
RT8299AZSP
C62
0.1uF 50V
C50
10uF 50V
C59
10uF 50V
R64
100K
C51
1uF
C54
0.1uF
10V
L6
4.7uH 2A
R70
30K
1%
PG3V3
R58
16K 1%
R59
5.1K 1%
V3P3
V3P3 RED
C47
22uF
C48
22uF
C65
0.1uF
10V
C64
0.1uF
10V
C12
4.7uF
R9
0E
EN
3.3V TO 5V 1A BOOST CONVERTER
U2
IC REG BOOST 5V 3.3A
L1
1uH 1.8A
SW
SW
VIN
EN
VOUT
VOUT
BP
GND
GND
TPS61253
C8
22uF
C63
0.1uF 10V
R7
330E
LED1
GREEN
5V ON
PWR LED
USB PROVIDER POWER MONITORING
VOUT
R169
16.5K
1%
1 Vfb
R166
0E
R165
1K
1%
R168
0E
R172
5.1K
1%
U15A
LM339
U15C
LM339
2N7002LT1G
Q1
Q2
R164
15K
R162
0E
P_POWER_GOOD 5
C52
0.1uF
10V
R167
20K
U15B
LM339
U15D
LM339
The voltage monitor is connected to the FB voltage of the Vbus regulator Vfb. In general the Vfb is regulated to 1.25V and the power good threshold is set at +/- 9% of the output voltage.
PCA: 121-60239-01
PCB: 600-60271-01
FAB DRW: 610-60275-01
ASSY DRW: 620-60283-01
CYPRESS SEMICONDUCTOR © 2016
Title
CCG EVK BASE BOARD - 3.3V, 5V POWER
Size
A4
Document Number
630-60281-01
Rev
6.0
Date: Tuesday, April 05, 2016
Sheet 2 of 6

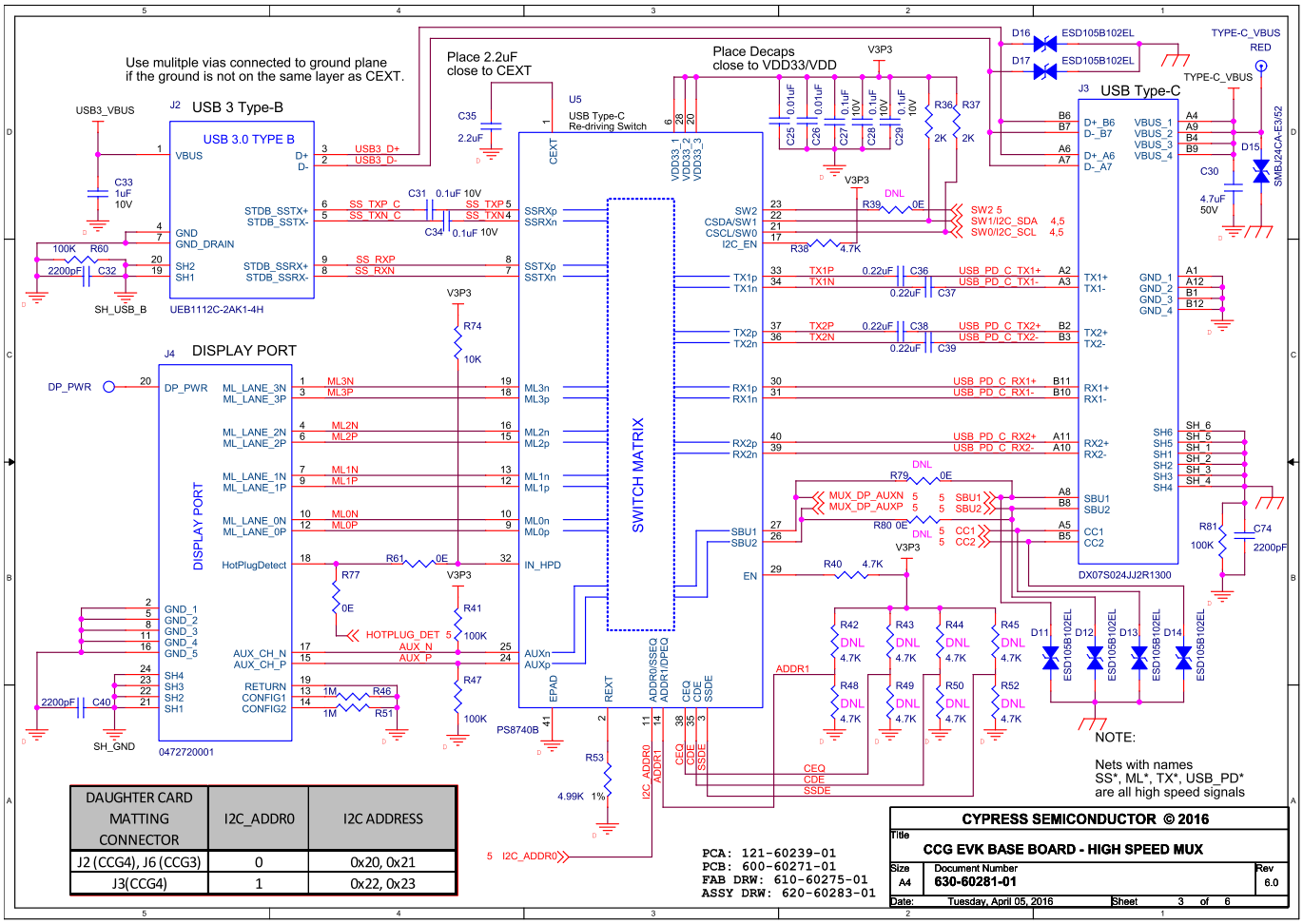
Use mulitple vias connected to ground plane if the ground is not on the same layer as CEXT.
Place 2.2uF close to CEXT
Place Decaps close to VDD33/VDD
USB3_VBUS
J2 USB 3 Type-B
USB 3.0 TYPE B
UEB1112C-2AK1-4H
SH_USB_B
J4 DISPLAY PORT
DISPLAY PORT
0472720001
SH_GND
U5
USB Type-C Re-driving Switch
SWITCH MATRIX
PS8740B
J3 USB Type-C
DX07S024JJ2R1300
TYPE-C_VBUS
ESD105B102EL
SMBJ24CA-E3/52
DAUGHTER CARD MATTING CONNECTOR
I2C_ADDR0
I2C ADDRESS
J2 (CCG4), J6 (CCG3)
0
0x20, 0x21
J3(CCG4)
1
0x22, 0x23
NOTE:
Nets with names SS*, ML*, TX*, USB_PD* are all high speed signals
PCA: 121-60239-01
PCB: 600-60271-01
FAB DRW: 610-60275-01
ASSY DRW: 620-60283-01
CYPRESS SEMICONDUCTOR © 2016
CCG EVK BASE BOARD - HIGH SPEED MUX
630-60281-01
Tuesday, April 05, 2016

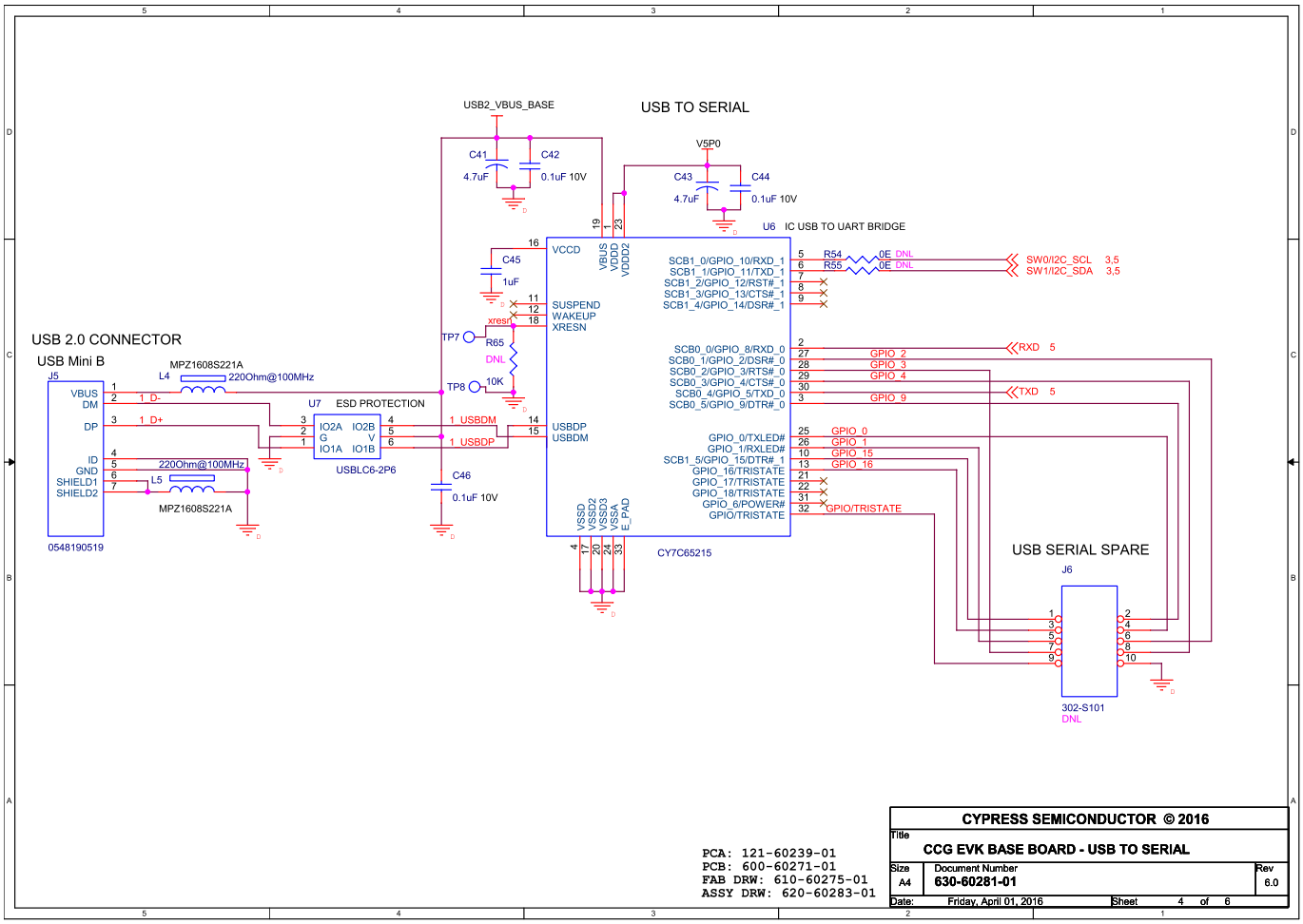
USB TO SERIAL
USB2_VBUS_BASE
C41
4.7uF
C42
0.1uF 10V
V5P0
C43
4.7uF
C44
0.1uF 10V
U6 IC USB TO UART BRIDGE
C45
1uF
VCCD
VBUS
VDDD
VDDD2
SUSPEND
WAKEUP
XRESN
xresn
TP7
R65
DNL
TP8
10K
USB 2.0 CONNECTOR
USB Mini B
J5
MPZ1608S221A
L4
220Ohm@100MHz
VBUS
DM
DP
ID
GND
SHIELD1
SHIELD2
1_D-
1_D+
220Ohm@100MHz
L5
MPZ1608S221A
0548190519
U7 ESD PROTECTION
IO2A
IO2B
G
V
IO1A
IO1B
USBLC6-2P6
1_USBDM
1_USBDP
USBDP
USBDM
C46
0.1uF 10V
VSSD
VSSD2
VSSD3
VSSA
E_PAD
CY7C65215
SCB1_0/GPIO_10/RXD_1
SCB1_1/GPIO_11/TXD_1
SCB1_2/GPIO_12/RST#_1
SCB1_3/GPIO_13/CTS#_1
SCB1_4/GPIO_14/DSR#_1
R54
R55
0E DNL
SW0/I2C_SCL 3,5
SW1/I2C_SDA 3,5
SCB0_0/GPIO_8/RXD_0
SCB0_1/GPIO_2/DSR#_0
SCB0_2/GPIO_3/RTS#_0
SCB0_3/GPIO_4/CTS#_0
SCB0_4/GPIO_5/TXD_0
SCB0_5/GPIO_9/DTR#_0
RXD 5
TXD 5
GPIO_2
GPIO_3
GPIO_4
GPIO_9
GPIO_0/TXLED#
GPIO_1/RXLED#
SCB1_5/GPIO_15/DTR#_1
GPIO_16/TRISTATE
GPIO_17/TRISTATE
GPIO_18/TRISTATE
GPIO_6/POWER#
GPIO/TRISTATE
GPIO_0
GPIO_1
GPIO_15
GPIO_16
GPIO/TRISTATE
USB SERIAL SPARE
J6
302-S101
DNL
PCA: 121-60239-01
PCB: 600-60271-01
FAB DRW: 610-60275-01
ASSY DRW: 620-60283-01
CYPRESS SEMICONDUCTOR © 2016
Title
CCG EVK BASE BOARD - USB TO SERIAL
Size
A4
Document Number
630-60281-01
Rev
6.0
Date:
Friday, April 01, 2016
Sheet
4
of
6

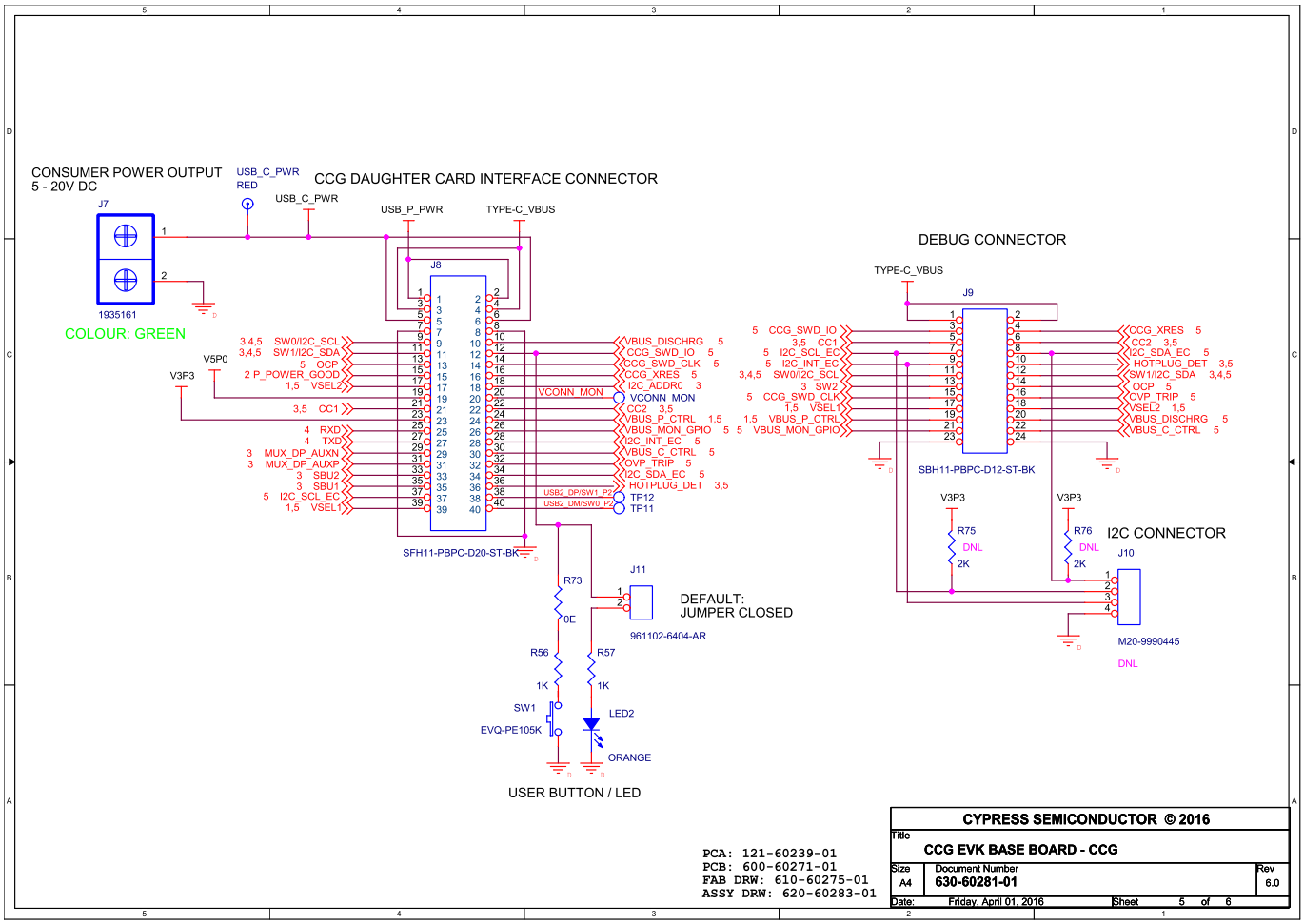
CONSUMER POWER OUTPUT
5 - 20V DC
USB_C_PWR
RED
CCG DAUGHTER CARD INTERFACE CONNECTOR
J7
1935161
COLOUR: GREEN
USB_C_PWR
USB_P_PWR
TYPE-C_VBUS
J8
SFH11-PBPC-D20-ST-BK
V5P0
V3P3
VCONN_MON
TP12
TP11
J11
R73
0E
961102-6404-AR
DEFAULT:
JUMPER CLOSED
R56
1K
R57
1K
SW1
EVQ-PE105K
LED2
ORANGE
USER BUTTON / LED
DEBUG CONNECTOR
J9
SBH11-PBPC-D12-ST-BK
R75
DNL
2K
R76
DNL
2K
I2C CONNECTOR
J10
M20-9990445
DNL
PCA: 121-60239-01
PCB: 600-60271-01
FAB DRW: 610-60275-01
ASSY DRW: 620-60283-01
CYPRESS SEMICONDUCTOR © 2016
Title
CCG EVK BASE BOARD - CCG
Size
A4
Document Number
630-60281-01
Rev
6.0
Date:
Friday, April 01, 2016
Sheet
5 of 6

B.2 CY4541 CCG4 Daughter Card Schematic (Rev 4* CCG4 Daughter Card)

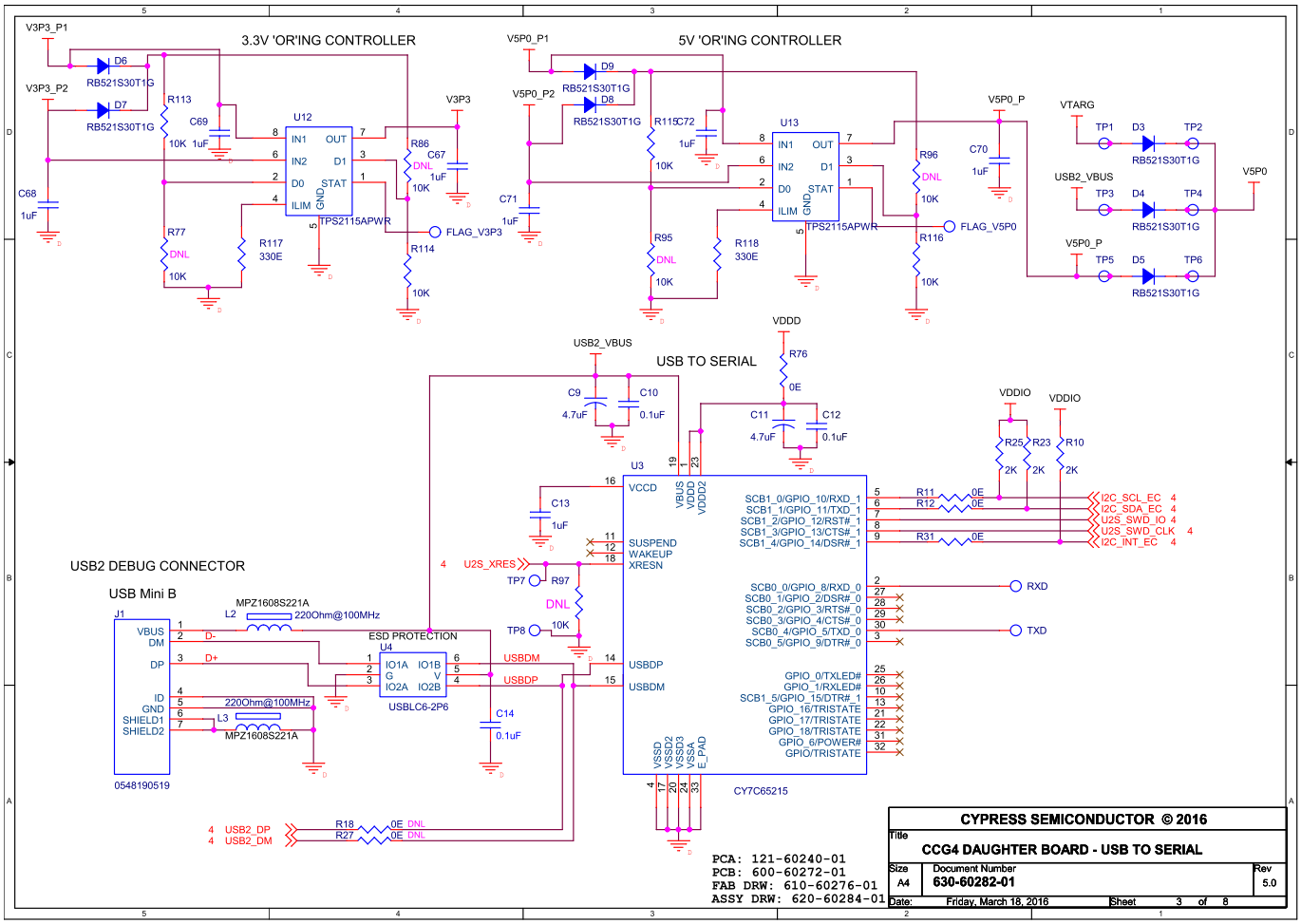

Note*: Rev4 denotes the revision number of a CCG4 daughter card PCB as shown in Figure 13.

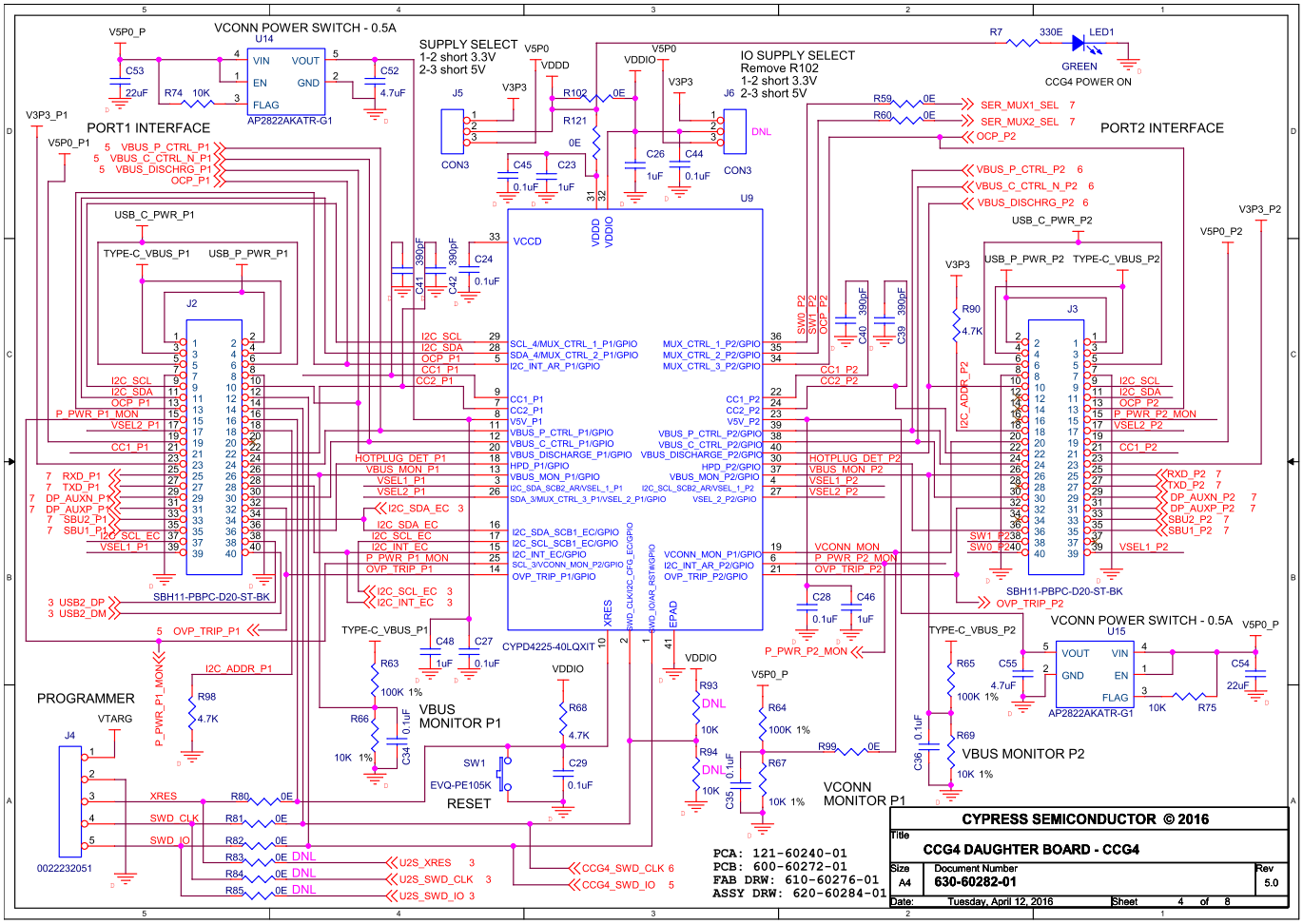
VCONN POWER SWITCH - 0.5A
SUPPLY SELECT
1-2 short 3.3V
2-3 short 5V
IO SUPPLY SELECT
Remove R102
1-2 short 3.3V
2-3 short 5V
PORT1 INTERFACE
PORT2 INTERFACE
PROGRAMMER
VBUS MONITOR P1
VBUS MONITOR P2
RESET
VCONN MONITOR P1
CCG4 POWER ON
CYPD4225-40LQXIT
AP2822AKATR-G1
SBH11-PBPC-D20-ST-BK
0022232051
PCA: 121-60240-01
PCB: 600-60272-01
FAB DRW: 610-60276-01
ASSY DRW: 620-60284-01
CYPRESS SEMICONDUCTOR © 2016
CCG4 DAUGHTER BOARD - CCG4
630-60282-01
Tuesday, April 12, 2016

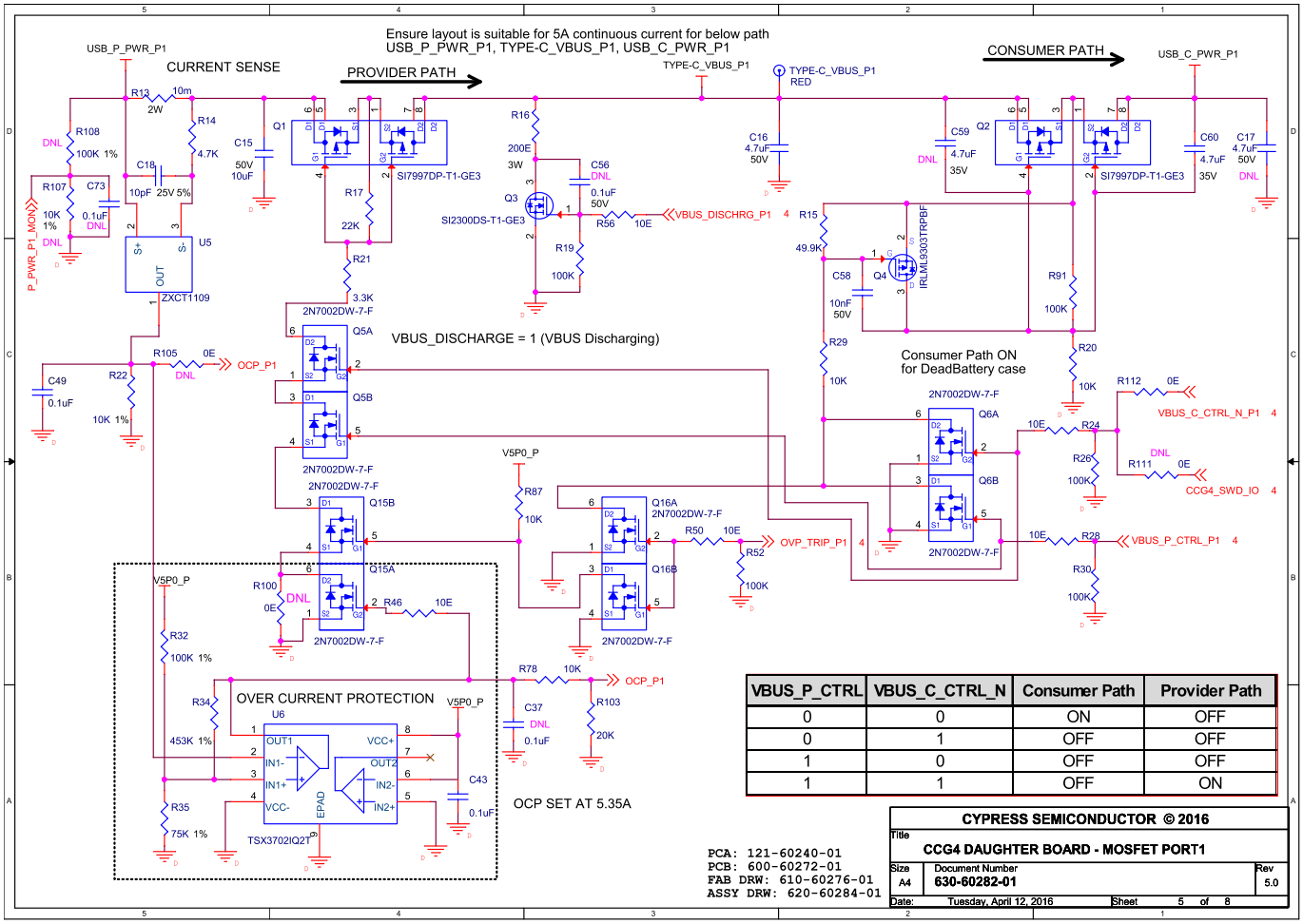
Ensure layout is suitable for 5A continuous current for below path
USB_P_PWR_P1, TYPE-C_VBUS_P1, USB_C_PWR_P1
CURRENT SENSE
PROVIDER PATH
CONSUMER PATH
USB_P_PWR_P1
USB_C_PWR_P1
TYPE-C_VBUS_P1
TYPE-C_VBUS_P1 RED
R13 10m 2W
R14 4.7K
R108 100K 1%
R107 10K 1%
C73 0.1uF
C18 10pF 25V 5%
C15 50V 10uF
U5 ZXCT1109
P_PWR_P1_MON
Q1 SI7997DP-T1-GE3
R17 22K
R21 3.3K
2N7002DW-7-F
Q5A
Q5B
VBUS_DISCHARGE = 1 (VBUS Discharging)
R105 0E DNL
OCP_P1
C49 0.1uF
R22 10K 1%
R16 200E 3W
C56 DNL 0.1uF 50V
Q3 SI2300DS-T1-GE3
R56 10E
VBUS_DISCHRG_P1 4
R19 100K
C16 4.7uF 50V
C59 DNL 4.7uF 35V
Q2 SI7997DP-T1-GE3
C60 4.7uF 35V
C17 4.7uF 50V DNL
R15 49.9K
C58 10nF 50V
Q4 IRLML9303TRPBF
R91 100K
R29 10K
R20 10K
Consumer Path ON
for DeadBattery case
Q6A
Q6B
R112 0E
VBUS_C_CTRL_N_P1 4
R24 10E
R26 100K
R111 DNL 0E
CCG4_SWD_IO 4
R28 10E
VBUS_P_CTRL_P1 4
R30 100K
V5P0_P
R87 10K
Q15B
Q15A
Q16A
Q16B
R50 10E
OVP_TRIP_P1 4
R52 100K
R100 0E DNL
R46 10E
R32 100K 1%
OVER CURRENT PROTECTION
U6 TSX3702IQ2T
R34 453K 1%
R35 75K 1%
R78 10K
OCP_P1
R103 20K
C37 DNL 0.1uF
C43 0.1uF
OCP SET AT 5.35A
VBUS_P_CTRL | VBUS_C_CTRL_N | Consumer Path | Provider Path
0 | 0 | ON | OFF
0 | 1 | OFF | OFF
1 | 0 | OFF | OFF
1 | 1 | OFF | ON
PCA: 121-60240-01
PCB: 600-60272-01
FAB DRW: 610-60276-01
ASSY DRW: 620-60284-01
CYPRESS SEMICONDUCTOR © 2016
Title
CCG4 DAUGHTER BOARD - MOSFET PORT1
Size A4
Document Number 630-60282-01
Rev 5.0
Date: Tuesday, April 12, 2016
Sheet 5 of 8

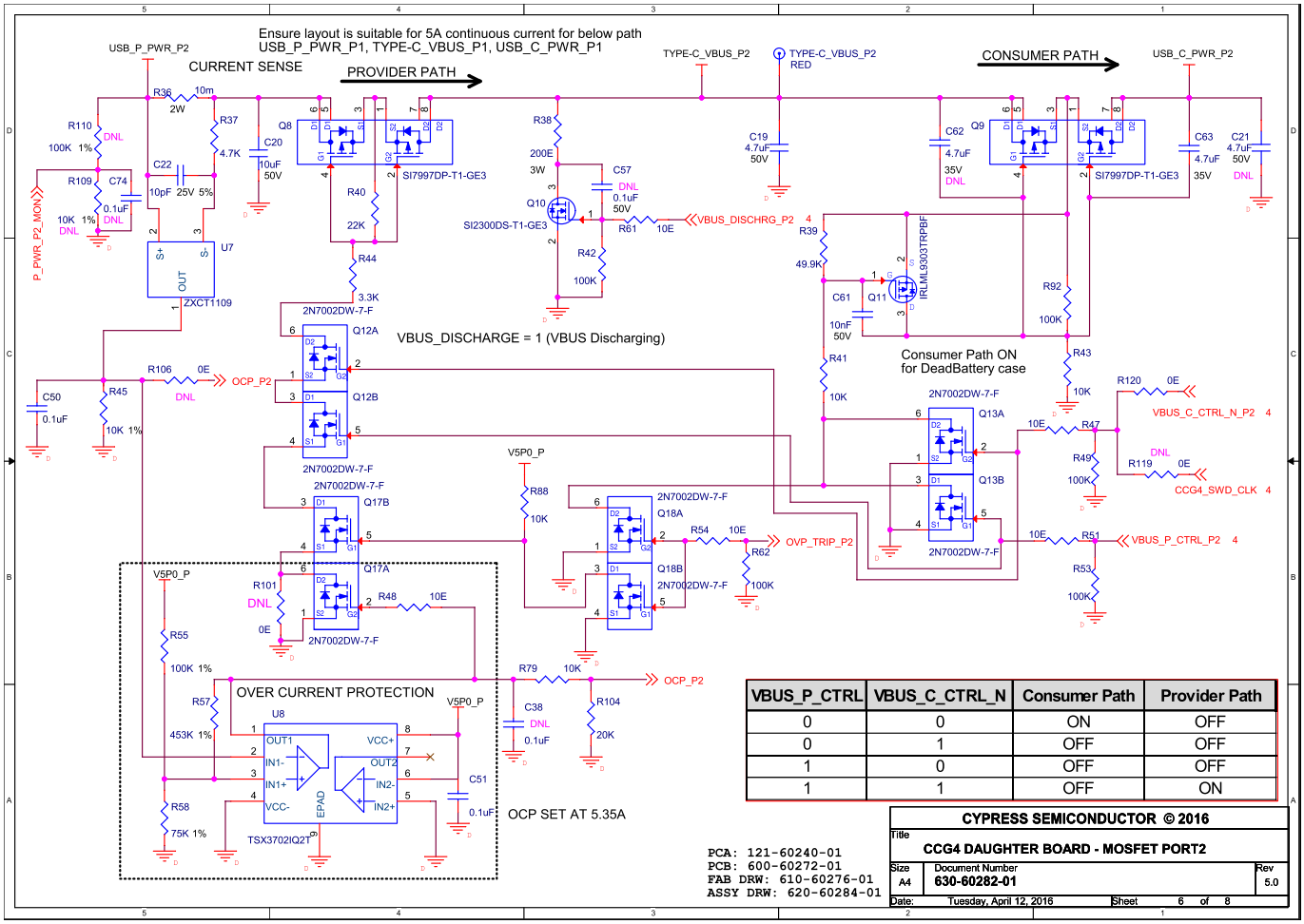

VBUS_P_CTRL	VBUS_C_CTRL_N	Consumer Path	Provider Path
0	0	ON	OFF
0	1	OFF	OFF
1	0	OFF	OFF
1	1	OFF	ON

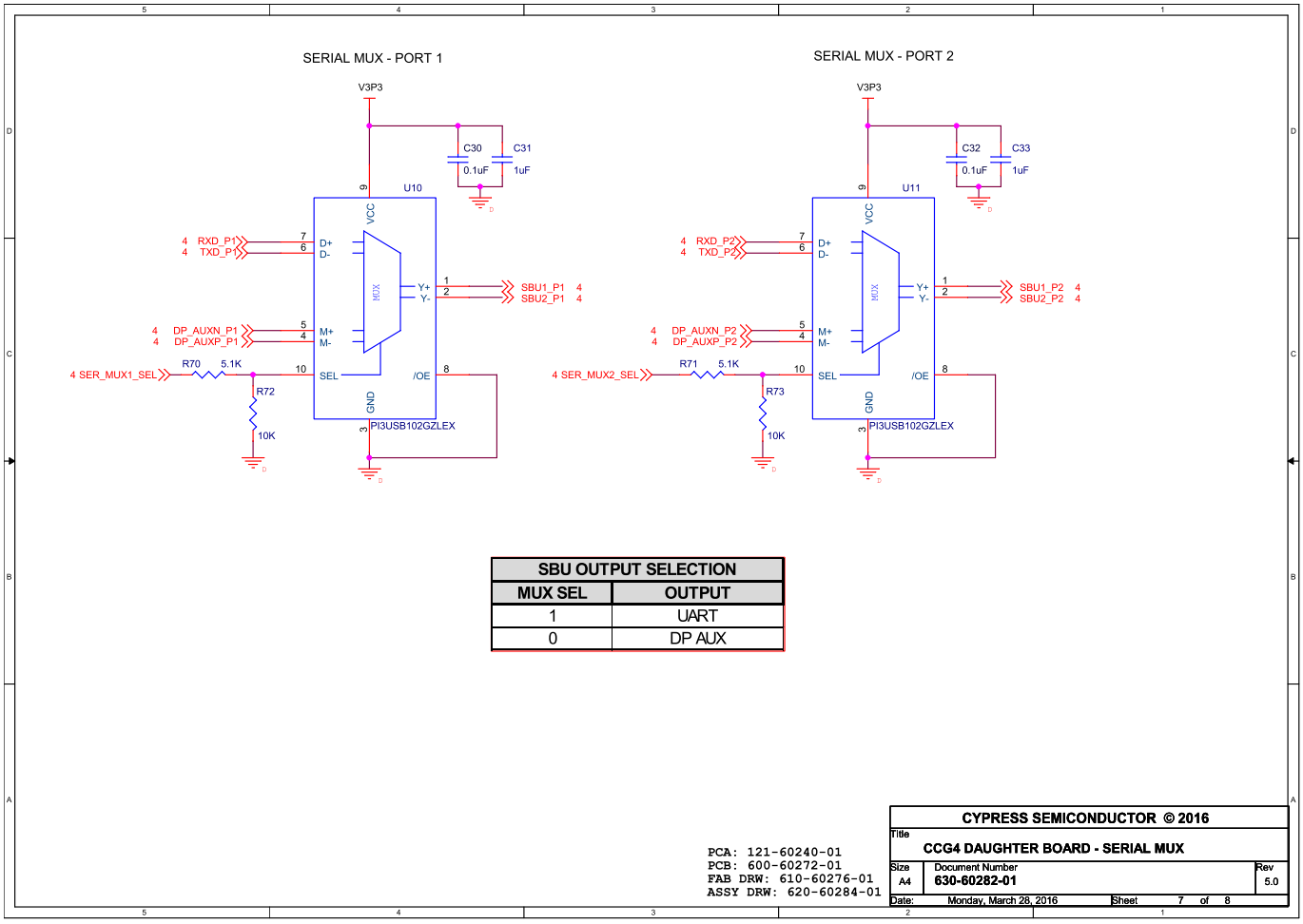

SBU OUTPUT SELECTION	
MUX SEL	OUTPUT
1	UART
0	DP AUX

PCA: 121-60240-01
PCB: 600-60272-01
FAB DRW: 610-60276-01
ASSY DRW: 620-60284-01

CYPRESS SEMICONDUCTOR © 2016		
Title: CCG4 DAUGHTER BOARD - SERIAL MUX		
Size: A4	Document Number: 630-60282-01	Rev: 5.0
Date: Monday, March 28, 2016	Sheet 7 of 8	

B.3 Type-C to Type-A Adapter Schematic

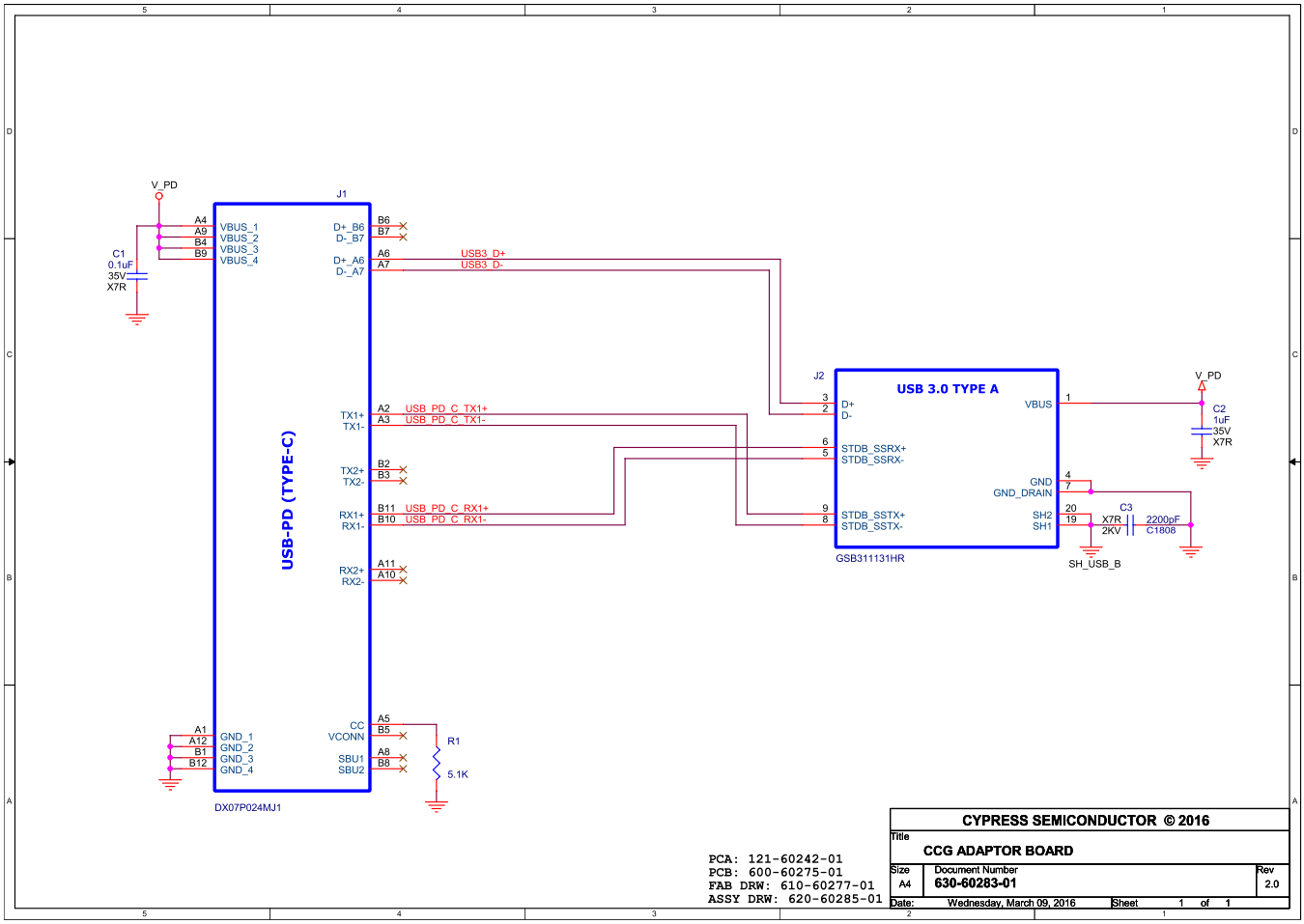

B.4 Bill of Materials

B.4.1 CCG EVK Base Board BOM (Rev5 CCG EVK Base Board)

Item	Qty	Reference	Value	Description	Manufacturer	Mfr Part Number
1	1	N/A	600-60271-01	PCB,3.18X3.71" CAF resistant High Tg ENIG finish,6 layer, Color = BLUE, Silk = WHITE.	Cypress Approved Manufacturer	600-60271-01
2	2	C25,C26	0.01uF	CAP CER 10000PF 25V 10% X7R 0402	AVX	04023C103KAT2A
3	14	C27,C28,C29,C31,C34,C42,C44,C46,C54,C63,C64,C65,C70,C71	0.1uF	CAP CER 0.1UF 10V 10% X7R 0402	TDK Corporation	C1005X7R1A104K050BB
4	4	C36,C37,C38,C39	0.22uF	CAP CER 0.22UF 16V X7R 0402	Yageo	CC0402KRX7R7BB224
5	3	C14,C50,C59	10uF	CAP CER 10UF 50V X7R 1210	Murata Electronics North America	GRM32ER71H106KA12L
6	3	C33,C45,C51	1uF	CAP CER 1UF 10V X5R 0402	Murata Electronics North America	GRM155R61A105KE15D
7	2	C61,C72	1uF	CAP CER 1UF 35V X7R 0603	TDK Corporation	C1608X7R1V105K080AC
8	1	C35	2.2uF	CAP CER 2.2UF 25V 10% X5R 0603	TDK Corporation	C1608X5R1E225K080AB
9	3	C32,C40,C74	2200pF	CAP CER 2200PF 2KV 10% X7R 1808	JOHANSON	202R29W222KV4E
10	3	C8,C47,C48	22uF	CAP CER 22UF 10V X5R 0805	Murata Electronics North America	GRM219R61A226MEA0D
11	3	C12,C41,C43	4.7uF	CAP CER 4.7UF 10V 20% X5R 0402	TDK Corporation	C1005X5R1A475M050BC
12	2	C49,C62	0.1uF	CAP CER 0.1UF 50V 10% JB 0603	TDK Corporation	C1608JB1H104K080AA
13	1	C30	4.7uF	CAP CER 4.7UF 50V X7R 1210	Murata Electronics North America	GRJ32ER71H475KE11L
14	2	C116,C118	0.1uF	CAP CER 0.1UF 50V 10% X5R 0402	TDK	C1005X5R1H104K050BB
15	1	C120	0.1uF	CAP CER 0.1UF 25V 10% X7R 0603	Murata	GRM188R71E104KA01D
16	1	C121	0.47uF	CAP CER 0.47UF 50V 10% X7R 0603	TDK	C1608X7R1H474K080AC
17	1	C117	1uF	CAP CER 1UF 50V 10% X5R 0603	TDK Corporation	C1608X5R1H105K080AB
18	1	C141	270pF	Capacitor, 270pF, 50V, 5%, NPO, 0402	Murata	GRM1555C1H271JA01D
19	2	C119,C123	330uF	CAP ALUM 330UF 50V 20% SMD	Panasonic	EEE-FT1H331AP
20	1	C140	470pF	Capacitor, 470pF, 50V, 10%, X7R, 0603	Murata	GRM188R71H471KA01D
21	1	C122	8.2nF	CAP CER 8200PF 50V 10% X7R 0402	Kemet	C0402C822K5RACTU
22	3	D4,D6,D9	PMEG3050BEP,115	DIODE SCHOTTKY 30V 5A SOD128	NXP Semiconductors	PMEG3050BEP,115
23	1	D8	1N4148WFL-G3-08	DIODE GP 75V 150MA SOD123FL	Vishay Semiconductor Diodes Division	1N4148WFL-G3-08
24	1	D10	SMBJ24A-TR	TVS DIODE 24VWM 50VC DO214AA	STMicroelectronics	SMBJ24A-TR
25	6	D11,D12,D13,D14,D16,D17	ESD105B102EL	TVS DIODE 5.5VWM 14VC TSLP2-2	Infineon Technologies	ESD105B102ELE6327XTMA1
26	1	D15	SMBJ24CA-E3/52	TVS DIODE 24VWM 38.9VC SMB	Vishay Semiconductor Diodes Division	SMBJ24CA-E3/52
27	1	D19	MMSZ4702T1G	Diode, Zener, 15V, 0.5W, SOD123	On Semiconductor	MMSZ4702T1G

Item	Qty	Reference	Value	Description	Manufacturer	Mfr Part Number
28	1	D20	MBR0540T1G	DIODE SCHOTTKY 40V 0.5A SOD123	On Semiconductor	MBR0540T1G
29	1	D21	MMSD701T1G	Diode, Shottky, 70V, 0.2A, SOD123	On Semiconductor	MMSD701T1G
30	1	J1	694106301002	CONN JACK POWER R/A .100"PIN PCB	Wurth electronics	694106301002
31	1	J2	UEB1112C-2AK1-4H	Connector Receptacle USB TypeB 3.0, Super Speed 9 Position Through Hole, Right Angle, Horizontal	FOXCONN	UEB1112C-2AK1-4H
32	1	J3	DX07S024JJ2R1300	USB TYP C TP MNT DL RW SMT RECEP	JAE Electronics	DX07S024JJ2R1300
33	1	J4	472720001	Connector Receptacle DisplayPort 20 Position Surface Mount, Right Angle, Horizontal	Molex	472720001
34	1	J5	548190519	Connector Receptacle USB - mini B 2.0 OTG 5 Position Through Hole, Right Angle, Horizontal	Molex, LLC	548190519
35	1	J7	1935161	TERM BLOCK PCB 2POS 5.0MM GREEN	Phoenix Contact	1935161
36	1	J8	SFH11-PBPC-D20-ST-BK	Connector Header 40 Position 0.100" (2.54mm) Gold Through Hole	Sullins Connector Solutions	SFH11-PBPC-D20-ST-BK
37	1	J9	SBH11-PBPC-D12-ST-BK	CONN HEADER VERT 24POS GOLD	Sullins Connector Solutions	SBH11-PBPC-D12-ST-BK
38	1	J11	961102-6404-AR	CONN HEADER VERT SGL 2POS GOLD	3M	961102-6404-AR
39	1	J12	OSTTC020162	TERMINAL BLOCK 5MM VERT 2POS PCB	On Shore Technology Inc.	OSTTC020162
40	1	L1	1uH	FIXED IND 1UH 1.8A 48 MOHM SMD	Murata Electronics North America	LQM32PN1R0MG0L
41	1	L3	10uH	FIXED IND 10UH 9A 25.5 MOHM SMD	Bourns Inc.	SRP1245A-100M
42	2	L4,L5	220Ohm @100MHz	FERRITE CHIP 220 OHM 2A 0603	TDK Corporation	MPZ1608S221A
43	1	L6	4.7uH	FIXED IND 4.7UH 2A 72 MOHM SMD	Bourns Inc.	SRN5020-4R7M
44	1	LED1	GREEN	LED GREEN CLEAR 0603 SMD	Lite-On Inc.	LTST-C190GKT
45	1	LED2	ORANGE	LED ORANGE CLEAR 0603 SMD	Lite-On Inc.	LTST-C190KFKT
46	2	Q3,Q4	2N7002DW-7-F	MOSFET 2N-CH 60V 0.23A SOT-363	Diodes Incorporated	2N7002DW-7-F
47	2	Q1,Q2	2N7002LT1G	Transistor, 2N7002, N-Channel MOS-FET, 60V, 115mA, SOT-23	ON Semi	2N7002LT1G
48	1	Q5	MMBT3904LT1	TRANS NPN 40V 0.2A SOT23	ON Semi	MMBT3904LT1G
49	1	Q6	NTMFS5834NL	MOSFET N-CH 40V 13A SO-8FL	ON Semi	NTMFS5834NLT1G
50	1	Q7	NTTFS5826NL	MOSFET N-CH 60V 8A 8-WDFN	ON Semi	NTTFS5826NLTAG
51	4	R111,R124,R166,R168	0E	RES SMD 0.0OHM JUMPER 1/10W 0603	Panasonic Electronic Components	ERJ-3GEY0R00V
52	7	R9,R22,R25,R61,R73,R77,R162	0E	RES 0.0 OHM 1/16W JUMP 0402 SMD	Vishay Dale	CRCW040200000Z0ED
53	13	R30,R31,R32,R33,R34,R35,R41,R47,R60,R64,R66,R67,R81	100K	RES SMD 100K OHM 5% 1/10W 0402	Panasonic Electronic Components	ERJ-2GEJ104X
54	1	R74	10K	RES 10K OHM 1/16W 1% 0402	Samsung Electro-	RC1005F103CS

Item	Qty	Reference	Value	Description	Manufacturer	Mfr Part Number
					Mechanics America, Inc	
55	1	R58	16K	RES SMD 16K OHM 1% 1/16W 0402	Yageo	RC0402FR-0716KL
56	1	R56	1K	RES SMD 1K OHM 1% 1/10W 0402	Panasonic Electronic Components	ERJ-2RKF1001X
57	1	R57	1K	RES SMD 1K OHM 5% 1/2W 0805	Panasonic Electronic Components	ERJ-P06J102V
58	2	R46,R51	1M	RES SMD 1M OHM 1% 1/10W 0603	Yageo	RC0603FR-071ML
59	2	R36,R37	2K	RES SMD 2K OHM 5% 1/16W 0402	Yageo	RC0402JR-072KL
60	1	R70	30K	RES SMD 30K OHM 1% 1/16W 0402	Yageo	RC0402FR-0730KL
61	1	R7	330E	RES SMD 330 OHM 5% 1/10W 0603	Yageo	RC0603JR-07330RL
62	2	R38,R40	4.7K	RES SMD 4.7K OHM 5% 1/16W 0402	Yageo	RC0402JR-074K7L
63	1	R53	4.99K	RES SMD 4.99K OHM 1% 1/10W 0402	Panasonic Electronic Components	ERJ-2RKF4991X
64	1	R59	5.1K	RES SMD 5.1K OHM 1% 1/16W 0402	Yageo	RC0402FR-075K1L
65	1	R29	1.13K	RES SMD 1.13K OHM 1% 1/16W 0402	Stackpole Electronics Inc.	RMCF0402FT1K13
66	1	R28	1.5K	RES SMD 1.5K OHM 1% 1/10W 0402	Panasonic Electronic Components	ERJ-2RKF1501X
67	1	R169	16.5K	RES SMD 16.5K OHM 1% 1/10W 0603	Stackpole Electronics Inc.	RMCF0603FT16K5
68	1	R27	2.67K	RES SMD 2.67K OHM 1% 1/16W 0402	Yageo	RC0402FR-072K67L
69	1	R24	30E	RES SMD 30 OHM 1% 1/16W 0402	Yageo	RC0402FR-0730RL
70	1	R26	5.49K	RES SMD 5.49K OHM 1% 1/16W 0402	Yageo	RC0402FR-075K49L
71	1	R23	60.4E	RES SMD 60.4 OHM 1% 1/16W 0402	Yageo	RC0402FR-0760R4L
72	1	R176	100E	RES SMD 100 OHM 1% 1/10W 0603	Panasonic	ERJ-3EKF1000V
73	5	R109,R113,R118,R125,R170	10K	RES SMD 10K OHM 1% 1/10W 0603	Panasonic	ERJ-3EKF1002V
74	1	R112	14.3K	RES SMD 14.3K OHM 1% 1/10W 0603	Panasonic	ERJ-3EKF1432V
75	1	R115	100K	100k Ohm ±1% 0.1W, 1/10W Surface Mount Resistor Thick Film ±100ppm/°C 0603	Yageo	RC0603FR-07100KL
76	1	R164	15K	RES SMD 15K OHM 5% 1/10W 0603	Panasonic	ERJ-3GEYJ153V
77	1	R123	16.9K	RES SMD 16.9K OHM 1% 1/10W 0603	Panasonic	ERJ-3EKF1692V
78	2	R165,R182	1K	RES SMD 1K OHM 1% 1/10W 0603	Panasonic Electronic Components	ERJ-3EKF1001V
79	1	R179	20E	RES SMD 20 OHM 5% 1/10W 0603	Panasonic	ERJ-3GEYJ200V
80	3	R129,R167,R174	20K	RES SMD 20K OHM 1% 1/10W 0603	Panasonic	ERJ-3EKF2002V
81	1	R108	300E	RES SMD 300 OHM 5% 1/10W 0603	Panasonic	ERJ-3GEYJ301V
82	1	R110	5.1E	RES SMD 5.1 OHM 5% 1/10W 0603	Vishay	CRCW06035R10JNEA

Item	Qty	Reference	Value	Description	Manufacturer	Mfr Part Number
83	1	R172	5.1K	RES SMD 5.1K OHM 1% 1/10W 0603	Panasonic Electronic Components	ERJ-3EKF5101V
84	1	R127	619E	RES SMD 619 OHM 1% 1/10W 0603	Panasonic	ERJ-3EKF6190V
85	1	SW1	EVQ-PE105K	SWITCH TACTILE SPST-NO 0.05A 12V	Panasonic Electronic Components	EVQ-PE105K
86	1	U2	TPS61253	IC REG BOOST 5V 3.3A SYNC 9DSBGA	Texas Instruments	TPS61253YFFR
87	1	U3	NCP1034	IC, PWM Buck Controller, 100V, NCP1034, SOIC16	On Semiconductor	NCP1034DR2G
88	1	U4	CD74HC238PWR	IC DECODER/DEMUX HS 3-8 16-TSSOP	Texas Instruments	CD74HC238PWR
89	1	U5	PS8740B	USB Type-C Redriving Switch for USB Host / DisplayPort Source	Parade	PS8740B
90	1	U6	CY7C65215	IC USB TO UART BRIDGE DUAL 32QFN	Cypress Semiconductor Corp	CY7C65215-32LTXI
91	1	U7	USBLC6-2P6	TVS DIODE 5.25VWM 17VC SOT666	STMicroelectronics	USBLC6-2P6
92	1	U13	RT8299AZSP	IC REG BUCK ADJ 3A SYNC 8SOP	Richtek USA Inc.	RT8299AZSP
93	1	U14	L78L05ABUTR	IC REG LDO 5V 0.1A SOT89-3	STMicroelectronics	L78L05ABUTR
94	1	U15	LM339	IC COMPARATOR QUAD SGL 14TSSOP	ON Semiconductor	LM339DTBR2G
95	5	V3P3,V5P0,USB_P_PWR,USB_C_PWR,TYPE-C_VBUS	RED	TEST POINT PC MINI .040"D RED	Keystone Electronics	5000
96	4	GND1,GND2,GND3,GND4	BLACK	TEST POINT 43 HOLE 65 PLATED BLACK	Keystone Electronics	5001
MISC components						
97	4	Bumper	NA	BUMPER CYLIN 0.312" DIA BLK	3M	SJ61A6
98	1	Type-C Clamping Bracket	NA	Type-C Connector Bracket	GLOBAL TECHNOLOGY SERVICES	Type-C Connector Clamping Bracket
99	2	M2x5mm Screws	NA	SCREW, Pan Head, machined screws, M2 x 5mm		
100	1	Jumper Plug	NA	2.54MM JUMPER PLUG WITH TEST POINT	Wurth Electronics Inc	609002115121
101	1	Label	NA	LBL, PCA Identification Label, Vendor Code, Datecode, Serial Number(YYWWVVXXXX)	Cypress Semiconductor	
No load components						
102	1	C52	0.1uF	CAP CER 0.1UF 10V 10% X7R 0402	TDK Corporation	C1005X7R1A104K050BB
103	1	C124	330uF	CAP ALUM 330UF 50V 20% SMD	Panasonic	EEE-FT1H331AP
104	1	D18	PMEG3050BEP,115	DIODE SCHOTTKY 30V 5A SOD128	NXP Semiconductors	PMEG3050BEP,115
105	1	J6	302-S101	CONN HEADER VERT 10POS GOLD	On Shore Technology Inc.	302-S101
106	1	J10	M20-9990445	SIL VERTICAL PC TAIL PIN HEADER	Harwin Inc.	M20-9990445
107	5	R39,R54,R55,R79,R80	0E	RES 0.0 OHM 1/16W JUMP 0402 SMD	Vishay Dale	CRCW040200000Z0ED

Item	Qty	Reference	Value	Description	Manufacturer	Mfr Part Number
108	2	R75,R76	2K	RES SMD 2K OHM 5% 1/16W 0402	Yageo	RC0402JR-072KL
109	8	R42,R43,R44,R45,R48,R49,R50,R52	4.7K	RES SMD 4.7K OHM 5% 1/16W 0402	Yageo	RC0402JR-074K7L
110	1	R65	10K	RES 10K OHM 1/16W 1% 0402	Samsung Electro-Mechanics America, Inc	RC1005F103CS
111	1	R68	100K	RES SMD 100K OHM 5% 1/10W 0402	Panasonic Electronic Components	ERJ-2GEJ104X
112	1	R177	5.49K	RES SMD 5.49K OHM 1% 1/10W 0603	Panasonic	ERJ-3EKF5491V
113	3	TP11,TP12,VCONN_MON	YELLOW	TEST POINT 43 HOLE 65 PLATED YELLOW	Keystone Electronics	5004
114	3	Vfb,V_SYS,DP_PWR	RED	TEST POINT PC MINI .040"D RED	Keystone Electronics	5000

B.4.2 CY4541 CCG4 Daughter Card BOM (Rev 4 CCG4 Daughter Card)

Item	Qty	Reference	Value	Description	Manufacturer	Mfr Part Number
1	1	N/A	600-60271-01	PCB,3.18X3.71" CAF resistant High Tg ENIG finish,6 layer, Color = **BLUE,** Silk = WHITE.	Cypress Approved Manufacturer	600-60271-01
2	2	C25,C26	0.01uF	CAP CER 10000PF 25V 10% X7R 0402	AVX	04023C103KAT2A
3	14	C27,C28,C29,C31,C34,C42,C44,C46,C54,C63,C64,C65,C70,C71	0.1uF	CAP CER 0.1UF 10V 10% X7R 0402	TDK Corporation	C1005X7R1A104K050BB
4	4	C36,C37,C38,C39	0.22uF	CAP CER 0.22UF 16V X7R 0402	Yageo	CC0402KRX7R7BB224
5	3	C14,C50,C59	10uF	CAP CER 10UF 50V X7R 1210	Murata Electronics North America	GRM32ER71H106KA12L
6	3	C33,C45,C51	1uF	CAP CER 1UF 10V X5R 0402	Murata Electronics North America	GRM155R61A105KE15D
7	2	C61,C72	1uF	CAP CER 1UF 35V X7R 0603	TDK Corporation	C1608X7R1V105K080AC
8	1	C35	2.2uF	CAP CER 2.2UF 25V 10% X5R 0603	TDK Corporation	C1608X5R1E225K080AB
9	3	C32,C40,C74	2200pF	CAP CER 2200PF 2KV 10% X7R 1808	JOHANSON	202R29W222KV4E
10	3	C8,C47,C48	22uF	CAP CER 22UF 10V X5R 0805	Murata Electronics North America	GRM219R61A226MEA0D
11	3	C12,C41,C43	4.7uF	CAP CER 4.7UF 10V 20% X5R 0402	TDK Corporation	C1005X5R1A475M050BC
12	2	C49,C62	0.1uF	CAP CER 0.1UF 50V 10% JB 0603	TDK Corporation	C1608JB1H104K080AA
13	1	C30	4.7uF	CAP CER 4.7UF 50V X7R 1210	Murata Electronics North America	GRJ32ER71H475KE11L
14	2	C116,C118	0.1uF	CAP CER 0.1UF 50V 10% X5R 0402	TDK	C1005X5R1H104K050BB
15	1	C120	0.1uF	CAP CER 0.1UF 25V 10% X7R 0603	Murata	GRM188R71E104KA01D
16	1	C121	0.47uF	CAP CER 0.47UF 50V 10% X7R 0603	TDK	C1608X7R1H474K080AC
17	1	C117	1uF	CAP CER 1UF 50V 10% X5R 0603	TDK Corporation	C1608X5R1H105K080AB
18	1	C141	270pF	Capacitor, 270pF, 50V, 5%, NPO, 0402	Murata	GRM1555C1H271JA01D

Item	Qty	Reference	Value	Description	Manufacturer	Mfr Part Number
19	2	C119,C123	330uF	CAP ALUM 330UF 50V 20% SMD	Panasonic	EEE-FT1H331AP
20	1	C140	470pF	Capacitor, 470pF, 50V, 10%, X7R, 0603	Murata	GRM188R71H471KA01D
21	1	C122	8.2nF	CAP CER 8200PF 50V 10% X7R 0402	Kemet	C0402C822K5RACTU
22	3	D4,D6,D9	PMEG3050BEP,115	DIODE SCHOTTKY 30V 5A SOD128	NXP Semiconductors	PMEG3050BEP,115
23	1	D8	1N4148WFL-G3-08	DIODE GP 75V 150MA SOD123FL	Vishay Semiconductor Diodes Division	1N4148WFL-G3-08
24	1	D10	SMBJ24A-TR	TVS DIODE 24VWM 50VC DO214AA	STMicroelectronics	SMBJ24A-TR
25	6	D11,D12,D13,D14,D16,D17	ESD105B102EL	TVS DIODE 5.5VWM 14VC TSLP2-2	Infineon Technologies	ESD105B102ELE6327XTMA1
26	1	D15	SMBJ24CA-E3/52	TVS DIODE 24VWM 38.9VC SMB	Vishay Semiconductor Diodes Division	SMBJ24CA-E3/52
27	1	D19	MMSZ4702T1G	Diode, Zener, 15V, 0.5W, SOD123	On Semiconductor	MMSZ4702T1G
28	1	D20	MBR0540T1G	DIODE SCHOTTKY 40V 0.5A SOD123	On Semiconductor	MBR0540T1G
29	1	D21	MMSD701T1G	Diode, Shottky, 70V, 0.2A, SOD123	On Semiconductor	MMSD701T1G
30	1	J1	694106301002	CONN JACK POWER R/A .100"PIN PCB	Wurth electronics	694106301002
31	1	J2	UEB1112C-2AK1-4H	Connector Receptacle USB TypeB 3.0, Super Speed 9 Position Through Hole, Right Angle, Horizontal	FOXCONN	UEB1112C-2AK1-4H
32	1	J3	DX07S024JJ2R1300	USB TYP C TP MNT DL RW SMT RECEP	JAE Electronics	DX07S024JJ2R1300
33	1	J4	472720001	Connector Receptacle DisplayPort 20 Position Surface Mount, Right Angle, Horizontal	Molex	472720001
34	1	J5	548190519	Connector Receptacle USB - mini B 2.0 OTG 5 Position Through Hole, Right Angle, Horizontal	Molex, LLC	548190519
35	1	J7	1935161	TERM BLOCK PCB 2POS 5.0MM GREEN	Phoenix Contact	1935161
36	1	J8	SFH11-PBPC-D20-ST-BK	Connector Header 40 Position 0.100" (2.54mm) Gold Through Hole	Sullins Connector Solutions	SFH11-PBPC-D20-ST-BK
37	1	J9	SBH11-PBPC-D12-ST-BK	CONN HEADER VERT 24POS GOLD	Sullins Connector Solutions	SBH11-PBPC-D12-ST-BK
38	1	J11	961102-6404-AR	CONN HEADER VERT SGL 2POS GOLD	3M	961102-6404-AR
39	1	J12	OSTTC020162	TERMINAL BLOCK 5MM VERT 2POS PCB	On Shore Technology Inc.	OSTTC020162
40	1	L1	1uH	FIXED IND 1UH 1.8A 48 MOHM SMD	Murata Electronics North America	LQM32PN1R0MG0L
41	1	L3	10uH	FIXED IND 10UH 9A 25.5 MOHM SMD	Bourns Inc.	SRP1245A-100M
42	2	L4,L5	220Ohm @100MHz	FERRITE CHIP 220 OHM 2A 0603	TDK Corporation	MPZ1608S221A
43	1	L6	4.7uH	FIXED IND 4.7UH 2A 72 MOHM SMD	Bourns Inc.	SRN5020-4R7M
44	1	LED1	GREEN	LED GREEN CLEAR 0603 SMD	Lite-On Inc.	LTST-C190GKT
45	1	LED2	ORANGE	LED ORANGE CLEAR 0603 SMD	Lite-On Inc.	LTST-C190KFKT

Item	Qty	Reference	Value	Description	Manufacturer	Mfr Part Number
46	2	Q3,Q4	2N7002DW-7-F	MOSFET 2N-CH 60V 0.23A SOT-363	Diodes Incorporated	2N7002DW-7-F
47	2	Q1,Q2	2N7002LT1G	Transistor, 2N7002, N-Channel MOS-FET, 60V, 115mA, SOT-23	ON Semi	2N7002LT1G
48	1	Q5	MMBT3904LT1	TRANS NPN 40V 0.2A SOT23	ON Semi	MMBT3904LT1G
49	1	Q6	NTMFS5834NL	MOSFET N-CH 40V 13A SO-8FL	ON Semi	NTMFS5834NLT1G
50	1	Q7	NTTFS5826NL	MOSFET N-CH 60V 8A 8-WDFN	ON Semi	NTTFS5826NLTAG
51	4	R111,R124,R166,R168	0E	RES SMD 0.0OHM JUMPER 1/10W 0603	Panasonic Electronic Components	ERJ-3GEY0R00V
52	7	R9,R22,R25,R61,R73,R77,R162	0E	RES 0.0 OHM 1/16W JUMP 0402 SMD	Vishay Dale	CRCW040200000Z0ED
53	13	R30,R31,R32,R33,R34,R35,R41,R47,R60,R64,R66,R67,R81	100K	RES SMD 100K OHM 5% 1/10W 0402	Panasonic Electronic Components	ERJ-2GEJ104X
54	1	R74	10K	RES 10K OHM 1/16W 1% 0402	Samsung Electro-Mechanics America, Inc	RC1005F103CS
55	1	R58	16K	RES SMD 16K OHM 1% 1/16W 0402	Yageo	RC0402FR-0716KL
56	1	R56	1K	RES SMD 1K OHM 1% 1/10W 0402	Panasonic Electronic Components	ERJ-2RKF1001X
57	1	R57	1K	RES SMD 1K OHM 5% 1/2W 0805	Panasonic Electronic Components	ERJ-P06J102V
58	2	R46,R51	1M	RES SMD 1M OHM 1% 1/10W 0603	Yageo	RC0603FR-071ML
59	2	R36,R37	2K	RES SMD 2K OHM 5% 1/16W 0402	Yageo	RC0402JR-072KL
60	1	R70	30K	RES SMD 30K OHM 1% 1/16W 0402	Yageo	RC0402FR-0730KL
61	1	R7	330E	RES SMD 330 OHM 5% 1/10W 0603	Yageo	RC0603JR-07330RL
62	2	R38,R40	4.7K	RES SMD 4.7K OHM 5% 1/16W 0402	Yageo	RC0402JR-074K7L
63	1	R53	4.99K	RES SMD 4.99K OHM 1% 1/10W 0402	Panasonic Electronic Components	ERJ-2RKF4991X
64	1	R59	5.1K	RES SMD 5.1K OHM 1% 1/16W 0402	Yageo	RC0402FR-075K1L
65	1	R29	1.13K	RES SMD 1.13K OHM 1% 1/16W 0402	Stackpole Electronics Inc.	RMCF0402FT1K13
66	1	R28	1.5K	RES SMD 1.5K OHM 1% 1/10W 0402	Panasonic Electronic Components	ERJ-2RKF1501X
67	1	R169	16.5K	RES SMD 16.5K OHM 1% 1/10W 0603	Stackpole Electronics Inc.	RMCF0603FT16K5
68	1	R27	2.67K	RES SMD 2.67K OHM 1% 1/16W 0402	Yageo	RC0402FR-072K67L
69	1	R24	30E	RES SMD 30 OHM 1% 1/16W 0402	Yageo	RC0402FR-0730RL
70	1	R26	5.49K	RES SMD 5.49K OHM 1% 1/16W 0402	Yageo	RC0402FR-075K49L
71	1	R23	60.4E	RES SMD 60.4 OHM 1% 1/16W 0402	Yageo	RC0402FR-0760R4L
72	1	R176	100E	RES SMD 100 OHM 1% 1/10W 0603	Panasonic	ERJ-3EKF1000V
73	5	R109,R113,R118,R125,R170	10K	RES SMD 10K OHM 1% 1/10W 0603	Panasonic	ERJ-3EKF1002V
74	1	R112	14.3K	RES SMD 14.3K OHM 1% 1/10W 0603	Panasonic	ERJ-3EKF1432V

Item	Qty	Reference	Value	Description	Manufacturer	Mfr Part Number
75	1	R115	150K	RES SMD 150K OHM 1% 1/10W 0603	Panasonic	ERJ-3EKF1503V
76	1	R164	15K	RES SMD 15K OHM 5% 1/10W 0603	Panasonic	ERJ-3GEYJ153V
77	1	R123	16.9K	RES SMD 16.9K OHM 1% 1/10W 0603	Panasonic	ERJ-3EKF1692V
78	2	R165,R182	1K	RES SMD 1K OHM 1% 1/10W 0603	Panasonic Electronic Components	ERJ-3EKF1001V
79	1	R179	20E	RES SMD 20 OHM 5% 1/10W 0603	Panasonic	ERJ-3GEYJ200V
80	3	R129,R167,R174	20K	RES SMD 20K OHM 1% 1/10W 0603	Panasonic	ERJ-3EKF2002V
81	1	R108	300E	RES SMD 300 OHM 5% 1/10W 0603	Panasonic	ERJ-3GEYJ301V
82	1	R110	5.1E	RES SMD 5.1 OHM 5% 1/10W 0603	Vishay	CRCW06035R10JNEA
83	1	R172	5.1K	RES SMD 5.1K OHM 1% 1/10W 0603	Panasonic Electronic Components	ERJ-3EKF5101V
84	1	R127	619E	RES SMD 619 OHM 1% 1/10W 0603	Panasonic	ERJ-3EKF6190V
85	1	SW1	EVQ-PE105K	SWITCH TACTILE SPST-NO 0.05A 12V	Panasonic Electronic Components	EVQ-PE105K
86	1	U2	TPS61253	IC REG BOOST 5V 3.3A SYNC 9DSBGA	Texas Instruments	TPS61253YFFR
87	1	U3	NCP1034	IC, PWM Buck Controller, 100V, NCP1034, SOIC16	On Semiconductor	NCP1034DR2G
88	1	U4	CD74HC238PWR	IC DECODER/DEMUX HS 3-8 16-TSSOP	Texas Instruments	CD74HC238PWR
89	1	U5	PS8740B	USB Type-C Redriving Switch for USB Host / DisplayPort Source	Parade	PS8740B
90	1	U6	CY7C65215	IC USB TO UART BRIDGE DUAL 32QFN	Cypress Semiconductor Corp	CY7C65215-32LTXI
91	1	U7	USBLC6-2P6	TVS DIODE 5.25VWM 17VC SOT666	STMicroelectronics	USBLC6-2P6
92	1	U13	RT8299AZSP	IC REG BUCK ADJ 3A SYNC 8SOP	Richtek USA Inc.	RT8299AZSP
93	1	U14	L78L05ABUTR	IC REG LDO 5V 0.1A SOT89-3	STMicroelectronics	L78L05ABUTR
94	1	U15	LM339	IC COMPARATOR QUAD SGL 14TSSOP	ON Semiconductor	LM339DTBR2G
95	5	V3P3,V5P0,USB_P_PWR,USB_C_PWR,TYPE-C_VBUS	RED	TEST POINT PC MINI .040"D RED	Keystone Electronics	5000
96	4	GND1,GND2,GND3,GND4	BLACK	TEST POINT 43 HOLE 65 PLATED BLACK	Keystone Electronics	5001
MISC components						
97	4	Bumper	NA	BUMPER CYLIN 0.312" DIA BLK	3M	SJ61A6
98	1	Type-C Clamping Bracket	NA	Type-C Connector Bracket	GLOBAL TECHNOLOGY SERVICES	Type-C Connector Clamping Bracket
99	2	M2x5mm Screws	NA	SCREW, Pan Head, machined screws, M2 x 5mm		
100	1	Jumper Plug	NA	2.54MM JUMPER PLUG WITH TEST POINT	Wurth Electronics Inc	609002115121
101	1	Label	NA	LBL, PCA Identification Label, Vendor Code, Datecode, Serial Number(YYWWVVXXXX)	Cypress Semiconductor	

Item	Qty	Reference	Value	Description	Manufacturer	Mfr Part Number
No load components						
102	1	C52	0.1uF	CAP CER 0.1UF 10V 10% X7R 0402	TDK Corporation	C1005X7R1A104K050BB
103	1	C124	330uF	CAP ALUM 330UF 50V 20% SMD	Panasonic	EEE-FT1H331AP
104	1	D18	PMEG3050BEP,115	DIODE SCHOTTKY 30V 5A SOD128	NXP Semiconductors	PMEG3050BEP,115
105	1	J6	302-S101	CONN HEADER VERT 10POS GOLD	On Shore Technology Inc.	302-S101
106	1	J10	M20-9990445	SIL VERTICAL PC TAIL PIN HEADER	Harwin Inc.	M20-9990445
107	5	R39,R54,R55,R79,R80	0E	RES 0.0 OHM 1/16W JUMP 0402 SMD	Vishay Dale	CRCW04020000Z0ED
108	2	R75,R76	2K	RES SMD 2K OHM 5% 1/16W 0402	Yageo	RC0402JR-072KL
109	8	R42,R43,R44,R45,R48, R49,R50,R52	4.7K	RES SMD 4.7K OHM 5% 1/16W 0402	Yageo	RC0402JR-074K7L
110	1	R65	10K	RES 10K OHM 1/16W 1% 0402	Samsung Electro-Mechanics America, Inc	RC1005F103CS
111	1	R68	100K	RES SMD 100K OHM 5% 1/10W 0402	Panasonic Electronic Components	ERJ-2GEJ104X
112	1	R177	5.49K	RES SMD 5.49K OHM 1% 1/10W 0603	Panasonic	ERJ-3EKF5491V
113	3	TP11,TP12,VCONN_MON	YELLOW	TEST POINT 43 HOLE 65 PLATED YELLOW	Keystone Electronics	5004
114	3	Vfb,V_SYS,DP_PWR	RED	TEST POINT PC MINI .040"D RED	Keystone Electronics	5000

B.4.3 Type-C to Type-A Adapter BOM

Item	Qty	Reference	Value	Description	Manufacturer	Mfr Part Number
1	1		600-60275-01	PCB,1.27x0.93x0.032" CAF resistant High Tg ENIG finish,4 layer, Color = BLUE, Silk = WHITE.	Cypress Approved Manufacturer	600-60275-01
2	1	C1	0.1uF	CAP CER 0.1UF 35V X7R 0603	Taiyo Yuden	GMK107B7104KAHT
3	1	C2	1uF	CAP CER 1UF 35V X7R 0603	TDK Corporation	C1608X7R1V105K080AC
4	1	C3	2200pF	CAP CERAMIC 2KV X7R 1808 2200PF	JOHANSON	202R29W222KV4E
5	1	J1	DX07P024MJ1	USB Type-C Plug-Connector	Japan Aviation Electronics Industry LTD.	DX07P024MJ1
6	1	J2	GSB311131HR	CONN RCPT USB 3.0 TYPE A R/A 9PS	Amphenol	GSB311131HR
7	1	R1	5.1K	RES SMD 5.1K OHM 5% 1/10W 0402	Panasonic	ERJ-2GEJ512X
8	1	LABEL	NA	LBL, PCA Identification Label, Vendor Code, Datecode, Serial Number(YYWWVVXXXX)	Cypress Semiconductor	
9	1	QR CODE LABEL	NA	LBL, QR Code, CCG BASE BOARD	Cypress Semiconductor	

Revision History

Document Revision History

Document Title: CY4541 EZ-PD™ CCG4 Evaluation Kit Guide Document Number: 002-10353			
Revision	**Issue Date**	**Origin of Change**	**Description of Change**
**	02/11/2016	MVTA/SELV	New evaluation kit guide.
*A	04/07/2016	MVTA	Updated PCB images , CyInstaller Images and performed text edits
*B	04/21/2016	MVTA	1. Added KBA link in section 2.3 2. Added section 4.5 3. Added section 6.1.5 4. Updated PCBA images 5. Updated Appendix B 6. Added footnote in page#48 and page#53
*C	04/05/2016	MVTA	Updated Figure 5 in chapter 2
*D	07/25/2016	MVTA	Updated PCBA images
*E	05/26/2017	NIBK	Updated Cypress Logo and Copyright.