FIBOX
Enclosing innovations

CAB CAB ABS 302018 T3B

Sample photo

Order symbol:	CAB ABS 302018 T3B	**EAN**:	6418074020116
Product nbr:	8183032	**El. number**:	
Description:	Cabinet, ABS	Finland:	3424355
Remarks:	Lock on the long side	Electric No. Denmark:	8212019014
		Electric No. Italy:	7812020
		Electric No. Sweden:	2540035

Including: Cabinet base, door with PUR gasket, 3mm double bit lock(s) with key, screws for mounting plate/DIN-rail and corner plugs.

Dimensions:	Length	Width	Height
mm:	300	200	180
inch:	11.8	7.9	7.1

Materials:

Material:	ABS
Base colour:	RAL 7035 -light grey
Cover colour:	Smoked grey
Gasket material:	Polyurethane

Temperatures:

Temperature °C (short term):	-40 … 80 °C
Temperature °C (continuous):	-40 … 60 °C
Temperature °F (short term):	-40 … 175 °F
Temperature °F (continuous):	-40 … 140 °F

Accessories:

EKIV 23	Mounting plate

Accessories:

EKIV 17	DIN-35 Mounting rail
DS35170E1	DIN-35 Mounting rail
EKIV 27	DIN-35 Mounting rail
DS35270E1	DIN-35 Mounting rail
FP A 23	Swing-out door/Front plate
MB 12225 AL	Swing door set
FP 23	Front plate
FP 12-23	Front plate
DRF 23	DIN rail frame set

Rating:

Ingress Protection (EN 60529): IP65
Impact Resistance (EN 62262): IK08
Electrical insulation: Totally insulated
Halogen free (DIN/VDE 0472, Part 815): 1
Flammability Rating: UL 94 HB
Glow Wire Test (IEC 695-2-1) °C: 650
NEMA Class: NEMA 1, 4, 4X, 12, 13

Certificates:

SGS Fimko
Gost R

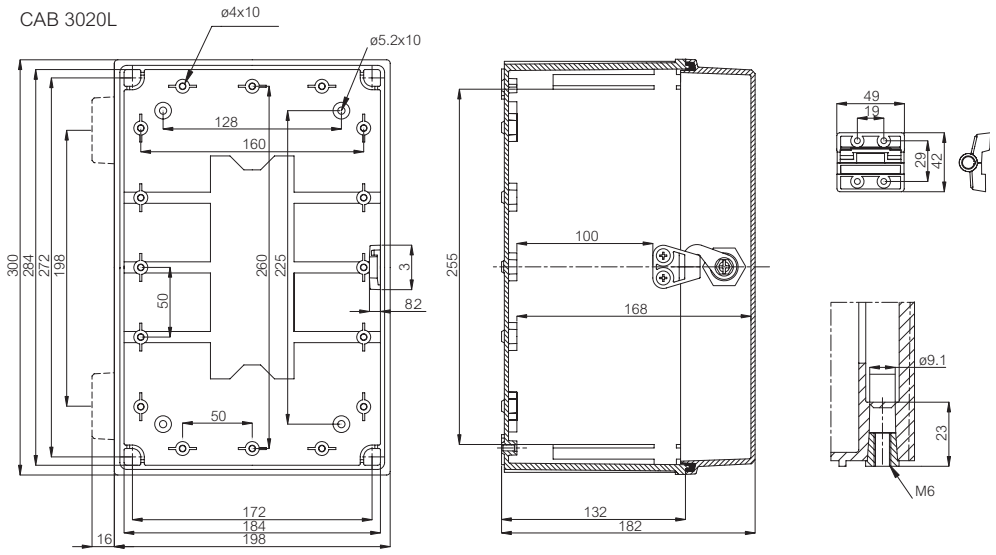

© Fibox Oy, Data subject to change without notice (printed: 26.7.2017)