FIBOX
Enclosing innovations

ARCA AR12106CHTSS

Sample photo

Order symbol:	AR12106CHTSS	**EAN**:	6418074067043
Product nbr:	8561049	**El. number**:	
Description:	PC Enclosure	Finland:	
Remarks:	Hinged opaque cover w/S.S. Lockable twist latch		

Including: Hinged cover base with 10-32 brass inserts, latched cover with formed in place PUR gasket, and stainless hinge pin. Quick release latches. (Latch options available.) Enclosure mounting foot kit. Accessory 10-32 screws for panel mounting.

Dimensions:	Length	Width	Height
mm:	305	254	152
inch:	12.0	10.0	6.0

Materials:

Material:	Polycarbonate
Base colour:	RAL 7035 -light grey
Cover screws material:	Stainless steel
Cover colour:	RAL 7035 -light grey
Gasket material:	Polyurethane

Temperatures:

Temperature °C (short term):	-40 … 140 °C
Temperature °C (continuous):	-40 … 80 °C
Temperature °F (short term):	-40 … 284 °F
Temperature °F (continuous):	-40 … 175 °F

Accessories:

ABP1210	Painted Steel Back Panel

Accessories:

ALBP1210	Aluminum Back Panel
ADFP1210	Dead Front Panel w/ screws
ASP1210	Aluminum Swing Panel
ASPK1210	Swing Panel Kit incl. Panel
ASPHK12	Swing Panel Kit w/o Panel
AMFL10	10" Mounting Flange Set

Rating:

Ingress Protection (EN 60529): IP66/IP67
Impact Resistance (EN 62262): IK07/IK08
Electrical insulation: Totally insulated
Halogen free (DIN/VDE 0472, Part 815): 1
UV resistance: UL 508
Flammability Rating: UL 508
Glow Wire Test (IEC 695-2-1) °C: 960
NEMA Class: NEMA 4, 4X, 6, 6P, 12, 13

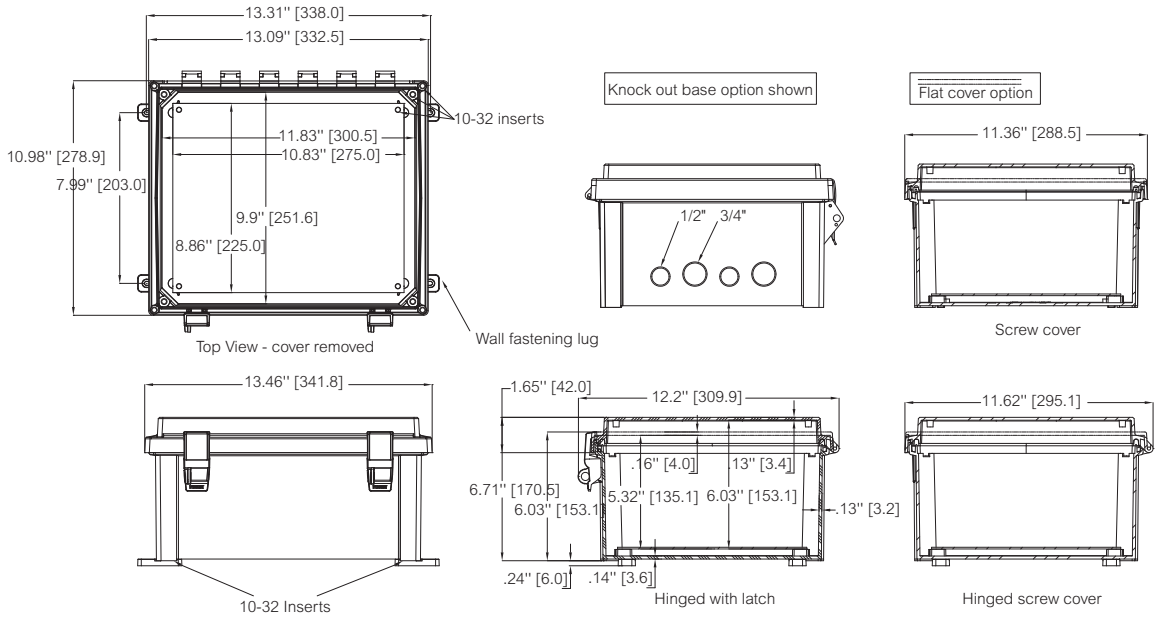

© Fibox Oy, Data subject to change without notice (printed: 18.5.2018)