FIBOX
Enclosing innovations

ARCA ARK1086CHSCTF

Order symbol:	ARK1086CHSCTF	**EAN**:	6418074096586
Product nbr:	8561482	**El. number**:	
Description:	PC Enclosure	Finland:	
Remarks:	Hinged transparent screw cover, base includes 1/2 and 3/4 inch knock-outs and plastic flange mounts.		

Including: Hinged screw cover. Base with 10-32 brass inserts, cover with formed in place PUR gasket, stainless hinge pin and 2 cover screws. Base includes 1/2 and 3/4 inch knock-outs. Enclosure mounting foot kit. Accessory 10-32 screws for panel mounting.

Dimensions:	Length	Width	Height
mm:	254	203	152
inch:	10.0	8.0	6.0

Materials:

Material:	Polycarbonate
Base colour:	RAL 7035 -light grey
Cover screws material:	Stainless steel
Cover colour:	Clear transparent
Gasket material:	Polyurethane

Temperatures:

Temperature °C (short term):	-40 … 140 °C
Temperature °C (continuous):	-40 … 80 °C
Temperature °F (short term):	-40 … 284 °F
Temperature °F (continuous):	-40 … 175 °F

Accessories:

ABP108	Painted Steel Back Panel

Accessories:

ALBP108	Aluminum Back Panel
ADFP108	Dead Front Panel w/ screws
ASP108	Aluminum Swing Panel
ASPK108	Swing Panel Kit incl. Panel
ASPHK10	Swing Panel Kit w/o Panel
AMFL8	8" Mounting Flange Set

Rating:

Ingress Protection (EN 60529): IP66/IP67
Impact Resistance (EN 62262): IK09
Electrical insulation: Totally insulated
Halogen free (DIN/VDE 0472, Part 815): 1
UV resistance: UL 508
Flammability Rating: UL 508
Glow Wire Test (IEC 695-2-1) °C: 960
NEMA Class: NEMA 4, 4X, 6, 6P, 12, 13

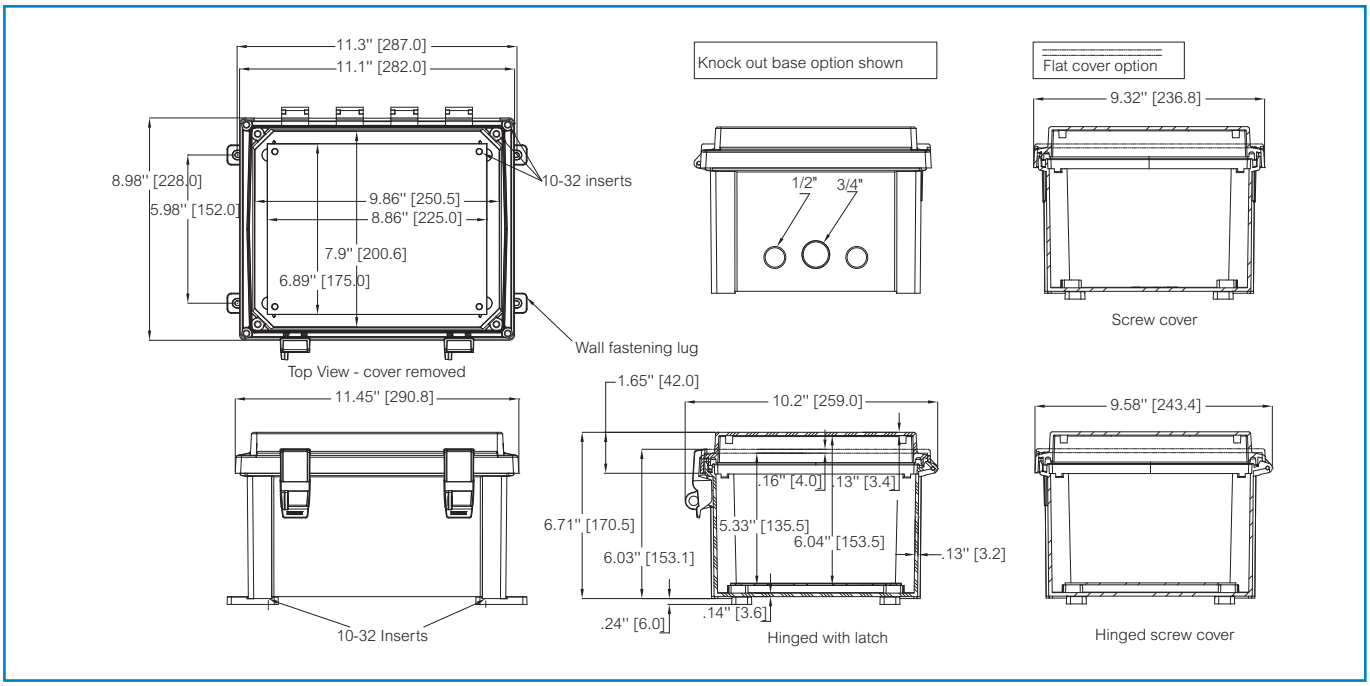

© Fibox Oy, Data subject to change without notice (printed: 12.12.2018)