ARCA AR IPW

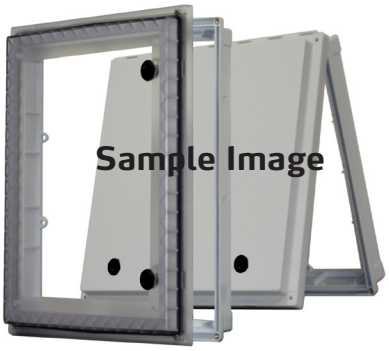

Order Symbol: AR IPW 1614SC

Description: Hinged Opaque Raised Screw Cover

Remarks

Includes, cover and base with formed in place PUR gasket, mounting hardware and template for mounting frame

Dimensions	Length (metric)	Width inches (metric)	Height inches (metric)
Inner Dimensions	15.59 (396.0)	13.62 (346.0)	3.31 (84.0)
Outer Dimensions	17.81 (452.3)	15.76 (400.4)	3.45 (87.59)

Rating:
NEMA 4, 4X, 12 & 13

Materials

Material:	Polycarbonate
Base Color:	RAL 7035 - LIGHT GRAY
Cover Color:	RAL 7035 - LIGHT GRAY
Gasket material:	Polyurethane

Temperature
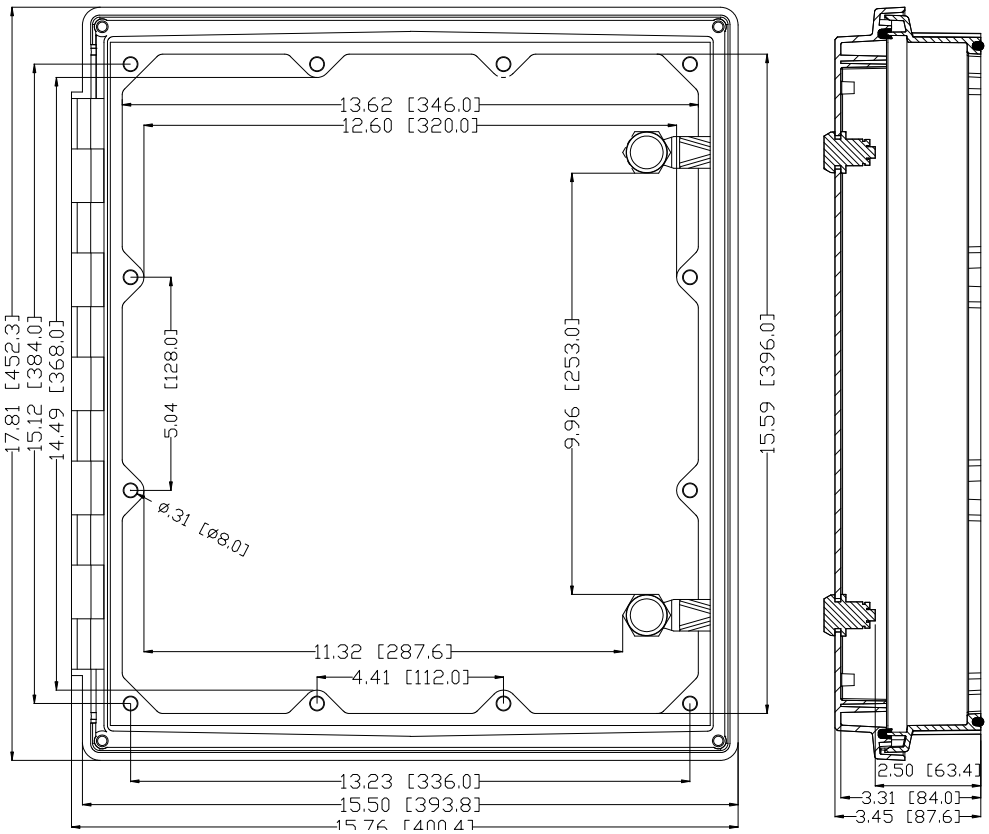
Temperature C° (short term):	-40° - 120° C"
Temperature C° (continuous):	-40° - 80° C"
Temperature F° (short term):	-40° - 250° F
Temperature F° (continuous):	-40° - 175° F