M39029/64
850-022
Standard Duty Electrical Pin Contact

M24308

Standard Pin Crimp Contact for MIL-DTL-24308

Mating End Size	Wire Accomodation	Military Part Number	Glenair Part Number
20	20-24 AWG	M39029/64-369	850-022-20-369

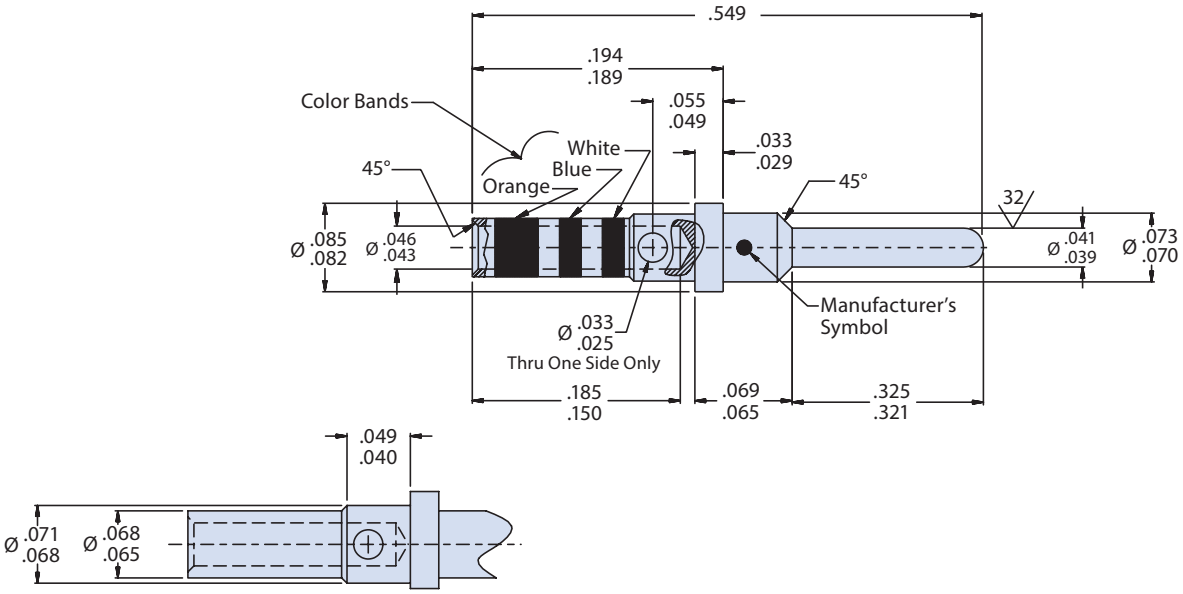

*Material and Finish**

Pin Contact: Copper Alloy/Gold Plated
Socket Contact: Copper Alloy/Gold Plated
Socket Contact Hood: Passivated Stainless Steel

*See pages A-4 and A-5 for detailed material specifications

Tools

Crimp Tool: M22520/2-01
Positioner: M22520/2-08
Insertion/Extraction Tools: M81969/14-02 or M81969/1-02

© 2011 Glenair, Inc.