FIBOX
Enclosing innovations

# UL MNX UL PC 100/50 LG

Sample photo

| | | | |
|---|---|---|---|
| **Order symbol**: | UL PC 100/50 LG | **EAN**: | 6418074057006 |
| **Product nbr**: | 6412302 | **El. number**: | |
| **Description**: | UL Enclosure, PC | Finland: | |
| **Remarks**: | Grey cover | Electric No. Denmark: | 8212030080 |

Including: Base with TPE gasket, screws for mounting plate/DIN-rail and cover with polyamide cover screws.

| **Dimensions**: | **Length** | **Width** | **Height** |
|---|---|---|---|
| **mm**: | 130 | 80 | 50 |
| **inch**: | 5.1 | 3.1 | 2.0 |

## Materials:

| | |
|---|---|
| **Material**: | Polycarbonate |
| **Base colour**: | RAL 7035 -light grey |
| **Cover screws material**: | Polyamide |
| **Cover colour**: | RAL 7035 -light grey |
| **Cover screws colour**: | Grey |
| **Gasket material**: | TPE |

## Temperatures:

| | |
|---|---|
| **Temperature °C (short term)**: | -40 … 120 °C |
| **Temperature °C (continuous)**: | -40 … 80 °C |
| **Temperature °F (short term)**: | -40 … 250 °F |
| **Temperature °F (continuous)**: | -40 … 175 °F |

## Rating:

Ingress Protection (EN 60529): IP66/IP67
Impact Resistance (EN 62262): IK08
Electrical insulation: Totally insulated
Halogen free (DIN/VDE 0472, Part 815): 1
UV resistance: UL 508
Flammability Rating: UL 746C 5"
UL Type:
Glow Wire Test (IEC 695-2-1) °C: 960

## Certificates:

Underwriters Laboratories
SGS Fimko
UL Canada
Gost R

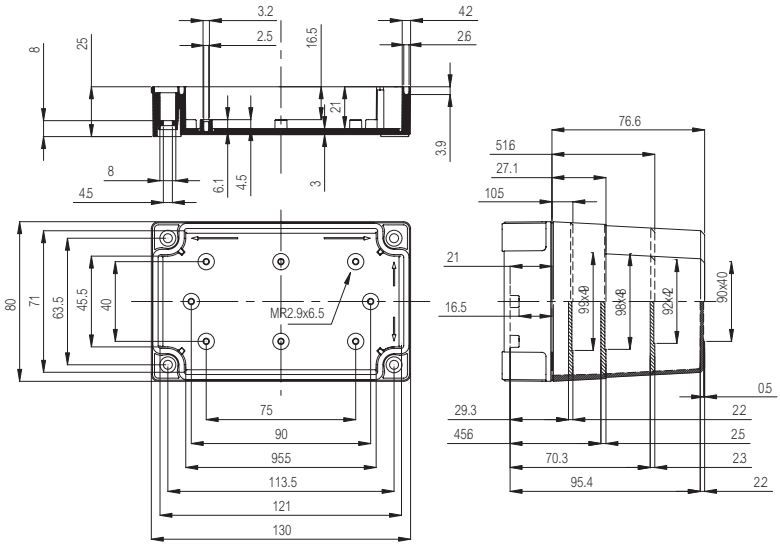


© Fibox Oy, Data subject to change without notice (printed: 8.4.2021)