PTS847 Series
4.6x2.2mm SMT Side Actuated Tact

NEW

Features/Benefits

- *4.6 x 2.2 x 2.6 mm package*
- *Height 0.95 mm above PCB (edge mount)*
- *Side actuation*
- *SMT termination with or without L-shape shield*
- *Hard & soft actuator options*
- *160 & 350 gf versions*
- *Lifecycles 200K*

Typical Applications

- *Mobile headphone/ Headset*
- *Health monitoring*
- *Sports watch*
- *Black box*
- *Bluetooth accessory*

Specifications

FUNCTION: momentary action
CONTACT ARRANGEMENT: 1 make contact = SPST N.O.
TERMINALS: SMT termination
TRAVEL: 0.15 mm
LIFE: 200,000 cycles

Electrical

MAXIMUM VOLTAGE: 15 VDC
MAXIMUM CURRENT DC: 20 mA
CONTACT RESISTANCE: 100 mΩ
INSULATION RESISTANCE: 100 MΩ min.
DIELECTRIC VOLTAGE: AC 250V

Environmental

OPERATING TEMPERATURE: -40˚C to 85˚C
STORAGE TEMPERATURE: -40˚C to 85˚C

Process

SOLDERING: This component is suited to the following methods:
Infrared Reflow Soldering in accordance with IEC61760-1

Packaging

2,500 pieces per reel

How To Order

Our easy build-a-switch concept allows you to mix and match options to create the switch you need. To order, select desired option from each category and and place it in the appropriate box.

P T S 8 4 7 — M M — [ ] [ ] [ ] — [ ] — [ ] — S M T R 2 L F S

Actuation Force
160 160 gf
350 350 gf

Shield Termination
NONE Standard version
L With long type L-shape

Actuation Type
NONE Hard actuation
S Soft actuation

Lead free compatible

STANDARD EDGE MOUNTING (HARD ACTUATOR VERSION)

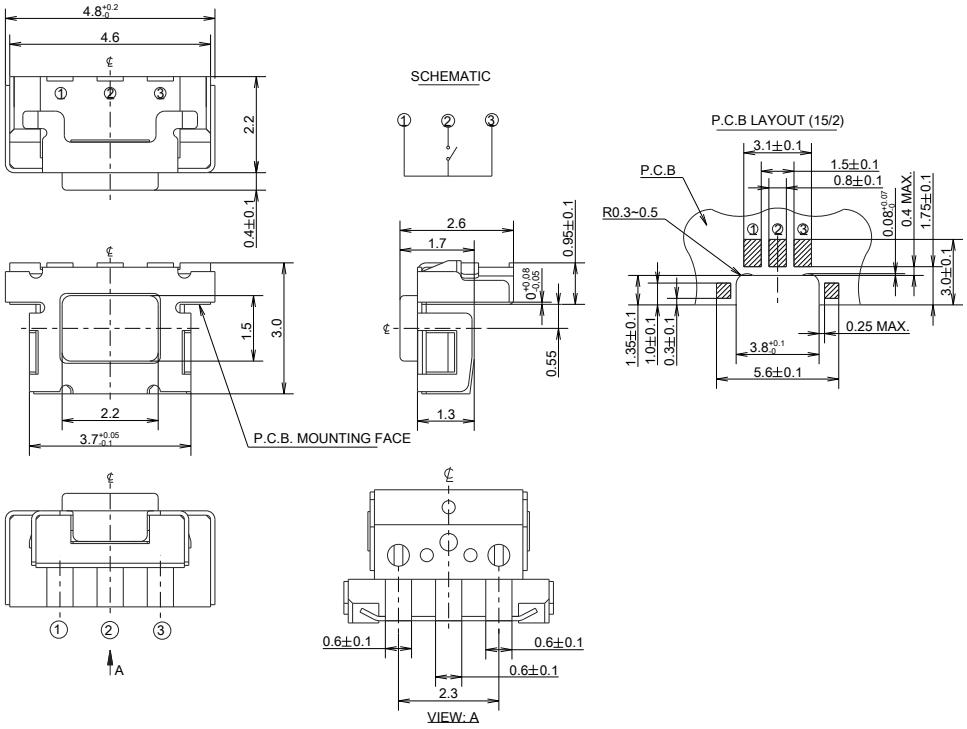

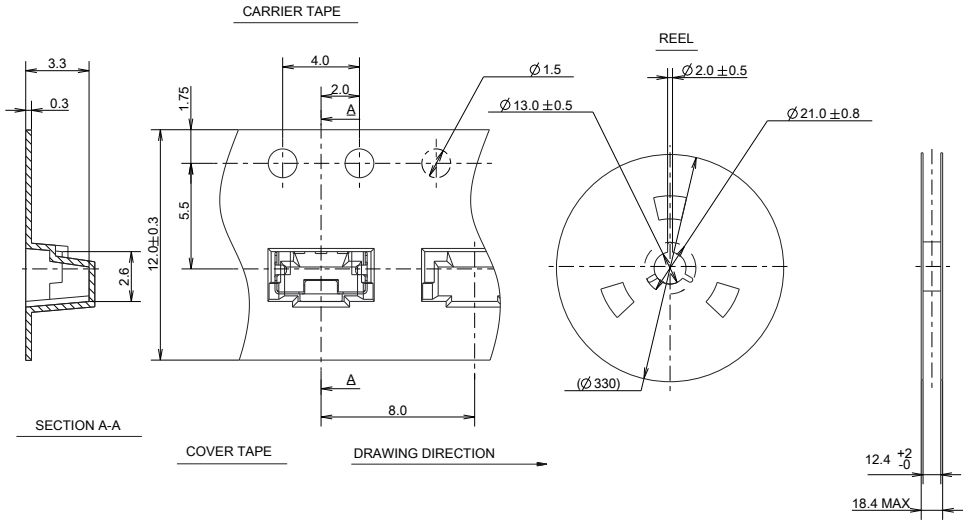

First Angle Projection

Dimensions are shown: mm
Specifications and dimensions subject to change

PTS847 Series
4.6x2.2mm SMT Side Actuated Tact

NEW

EDGE MOUNTING WITH L-SHAPE SHIELD TERMINATION (HARD ACTUATOR VERSION)

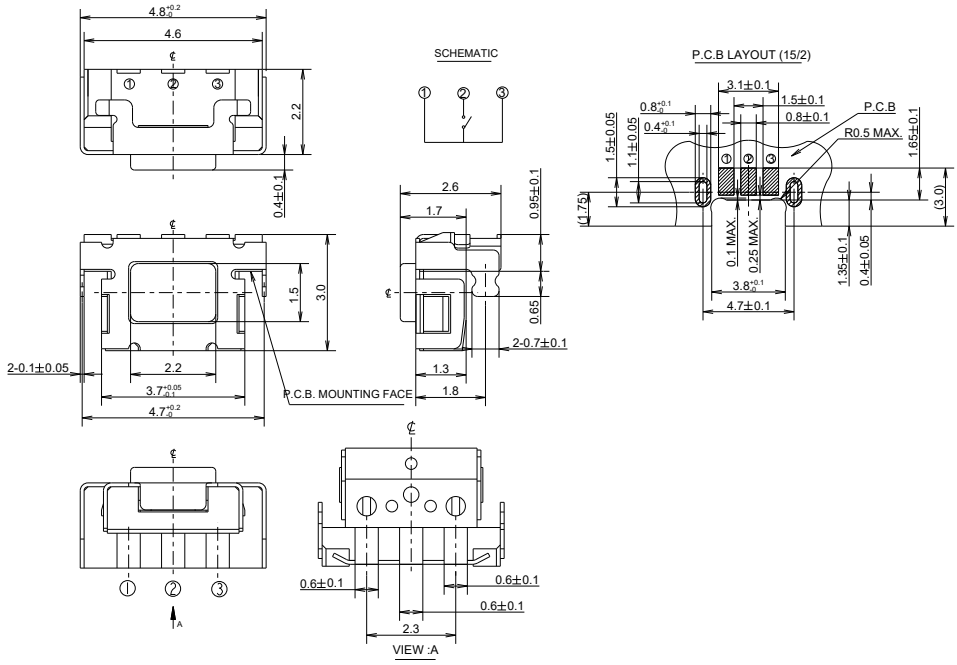

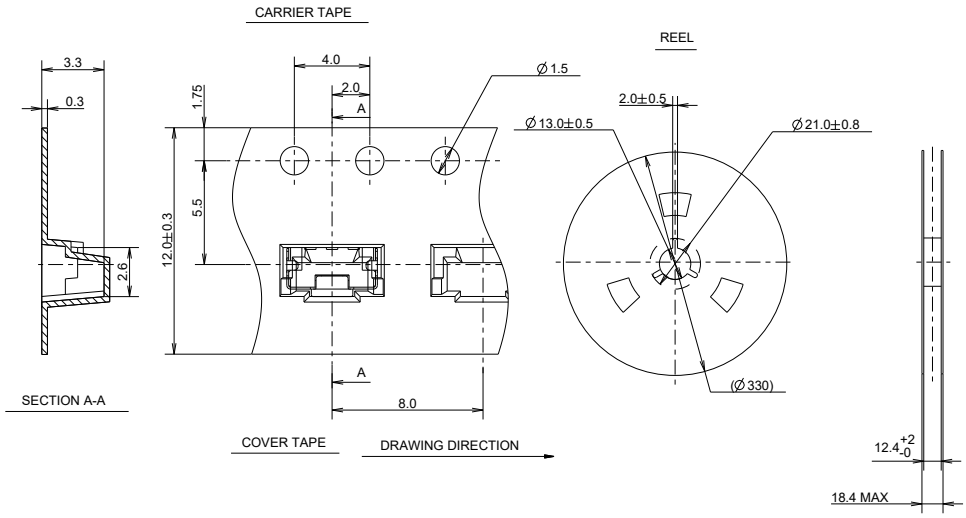

First Angle Projection

Dimensions are shown: mm
Specifications and dimensions subject to change

STANDARD EDGE MOUNTING (SOFT ACTUATOR VERSION)

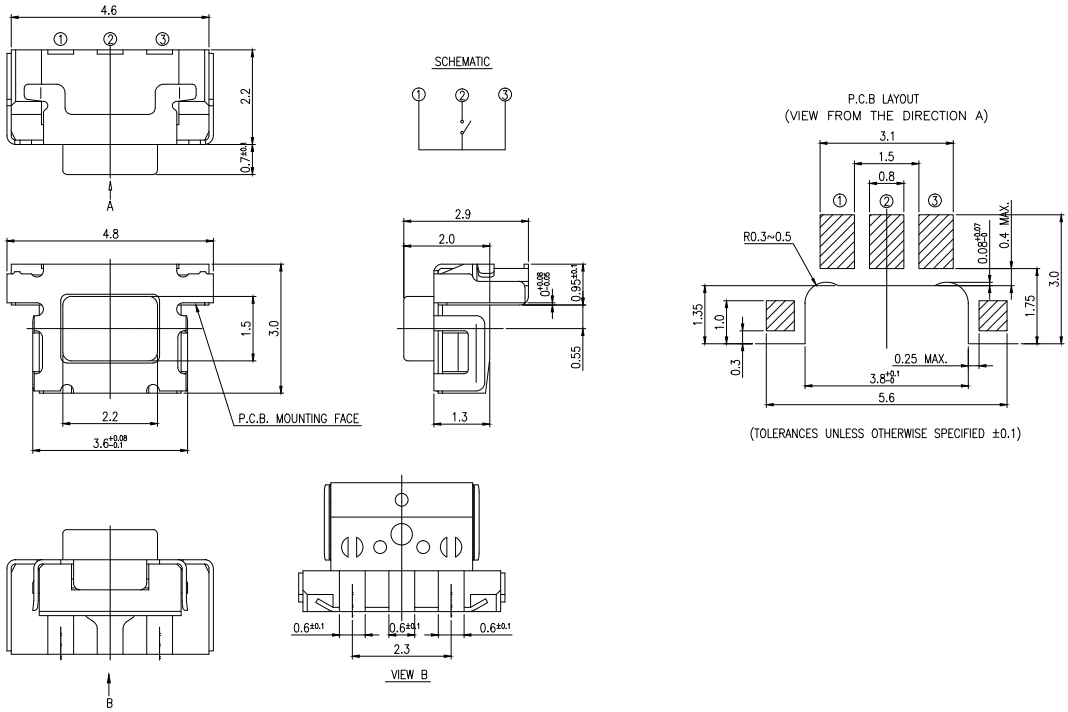

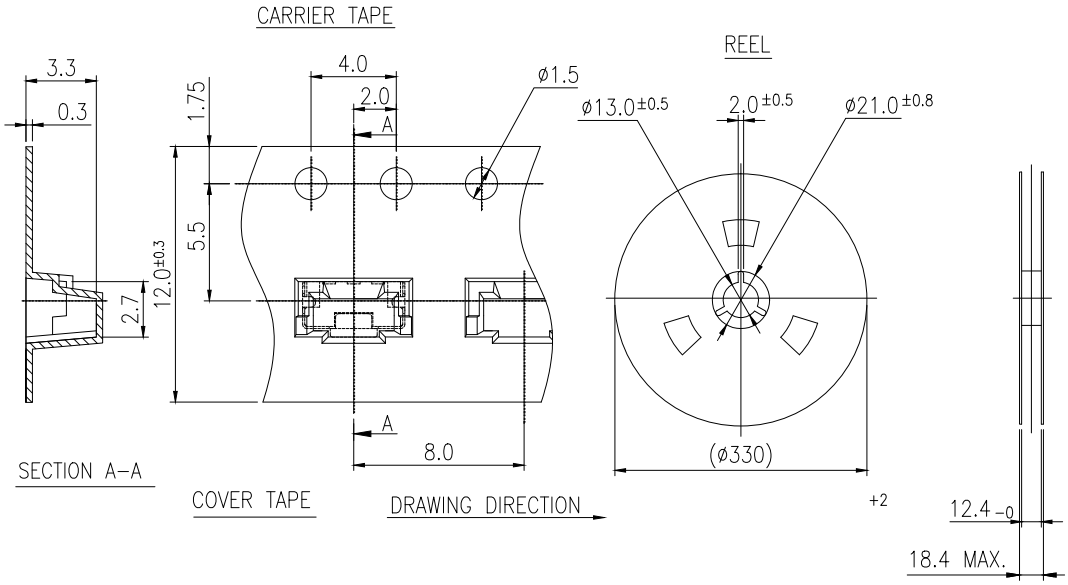
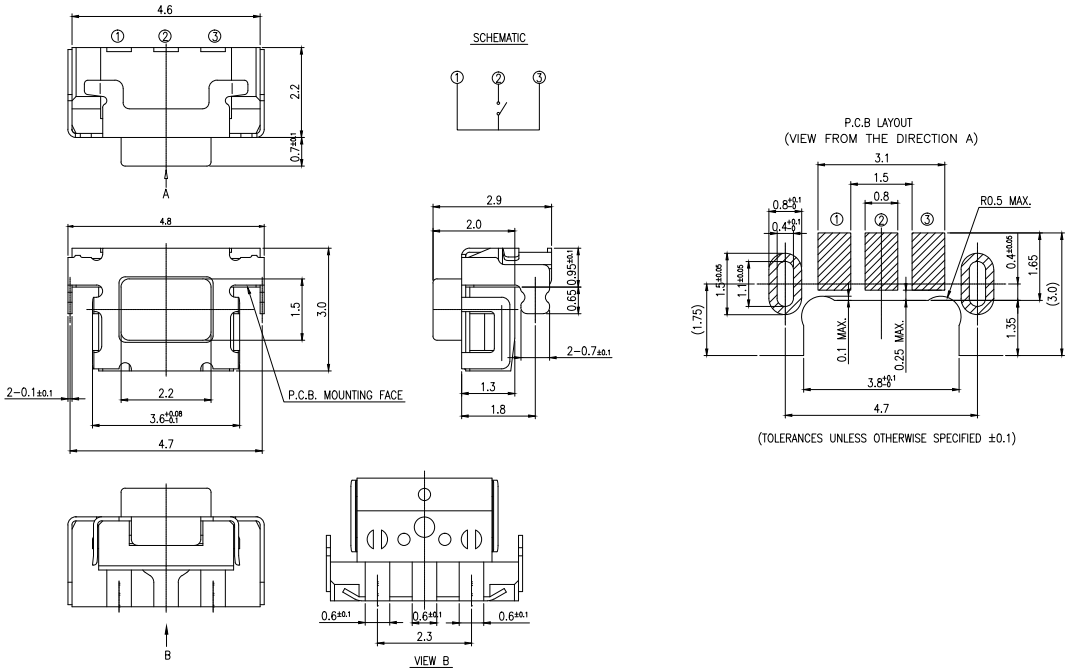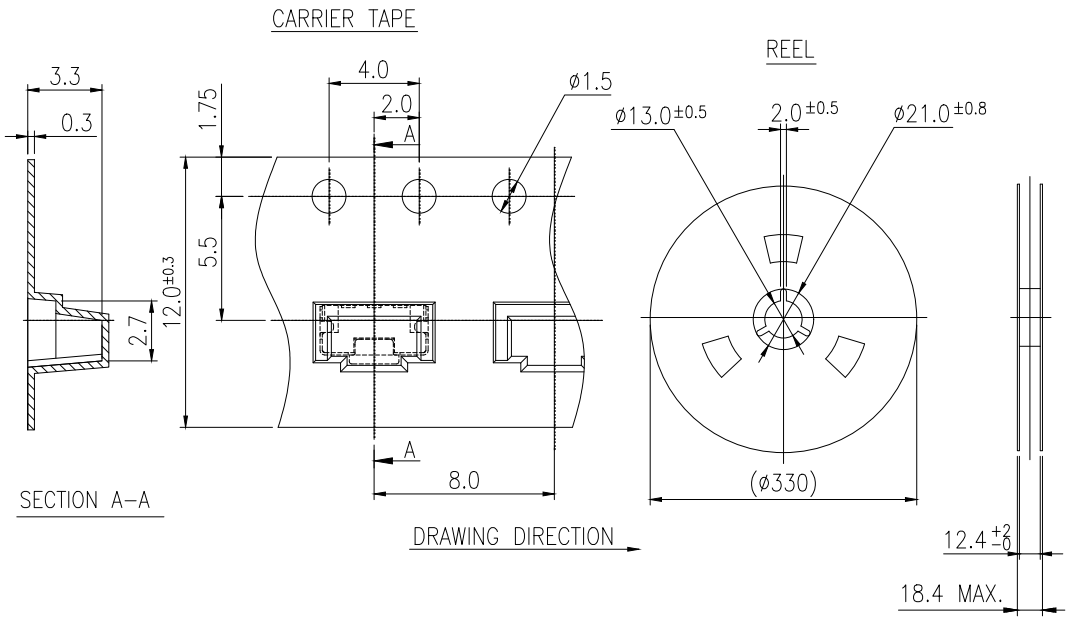
EDGE MOUNTING WITH L-SHAPE SHIELD TERMINATION (SOFT ACTUATOR VERSION)