Extrusion

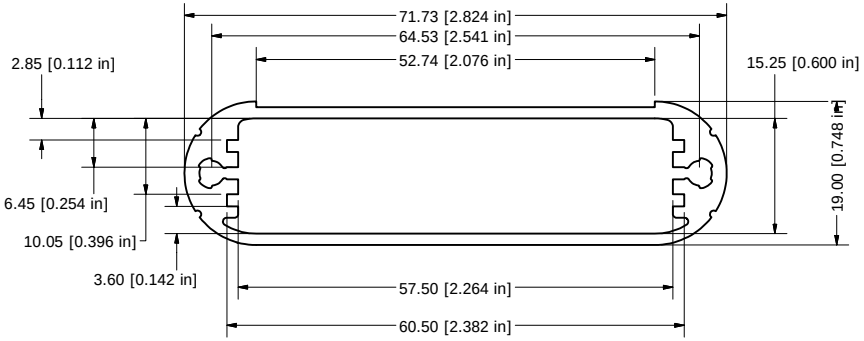

Extrusion designed for 60mm wide x 80mm long PCBs.

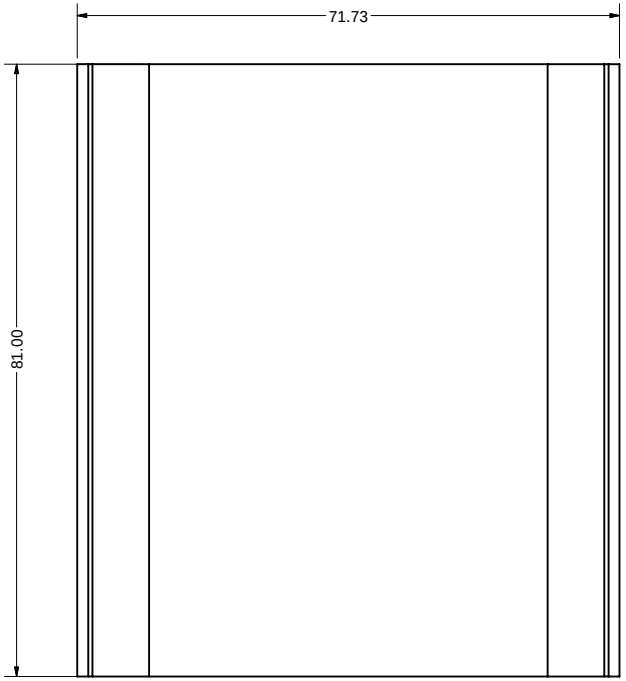

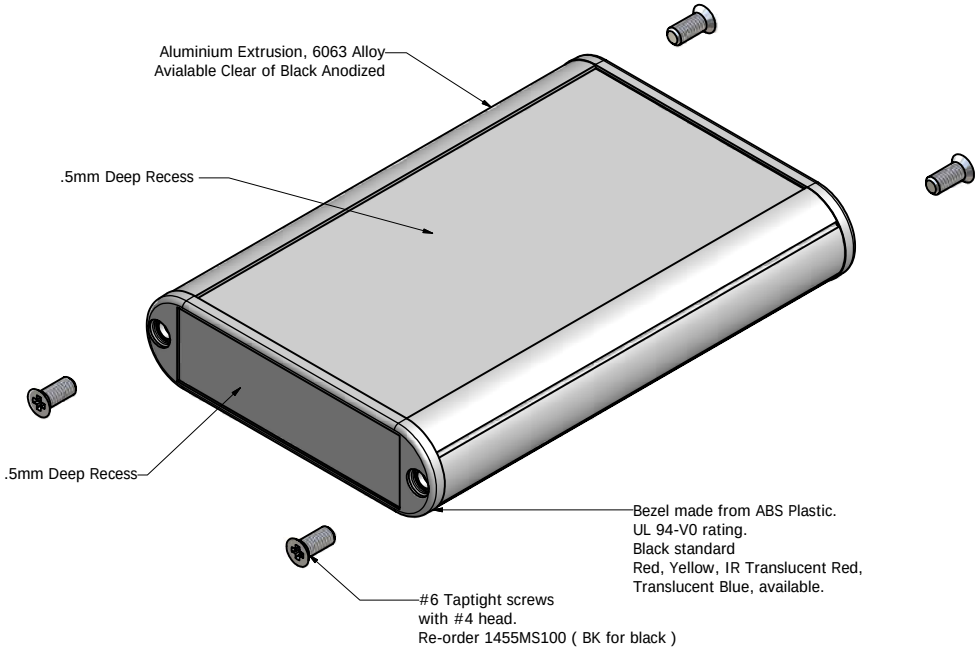

Bezel

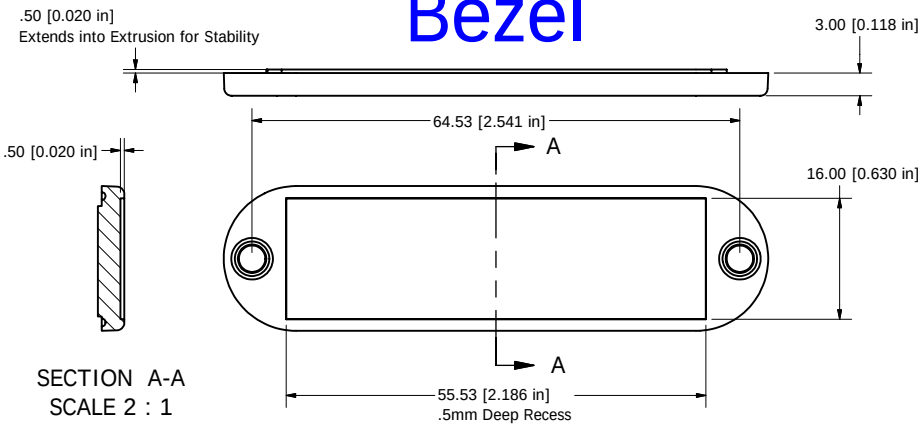

Milling, Drilling, Printing.
Modified Enclosures Supplied Quickly and Accurately.
Consult factory for Price and Delivery.

3D Models for product design in STEP and Iges Available
Consult Factory.

HAMMOND MANUFACTURING™

1455B802

www.hammondmfg.com