MICRO SWITCH
FREEPORT ILLINOIS U S A
A DIVISION OF HONEYWELL
FED MFG CODE 91929

SWITCH – ENCLOSED

CATALOG LISTING
21EN51-S

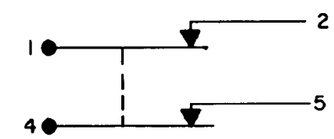

CIRCUIT DIAGRAM

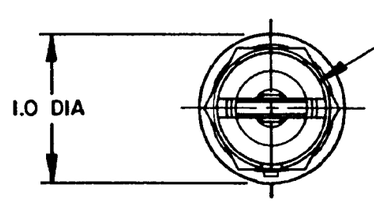

ROLLER GUIDE MAY BE LOCKED IN INCREMENTS OF 45° AZIMUTH. IT MAY ALSO BE UNSCREWED AND REMOVED FROM BUSHING TO FACILITATE INSTALLATION △3

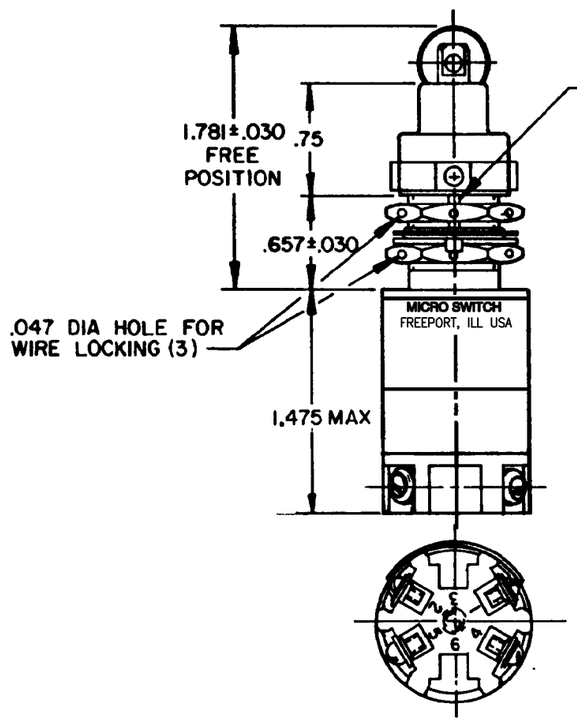

.072±.004 X .038±.003 DEEP KEYWAY TO WITHIN .250 OF SHOULDER

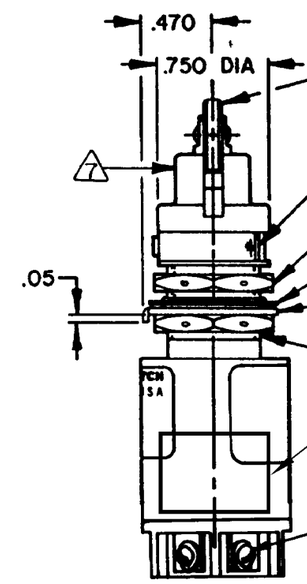

.5 DIA X .12 WIDE CORROSION RESISTANT STEEL ROLLER

ROLLER GUIDE LOCK RING △3 △7

CORROSION RESISTANT STEEL HEX NUT .812 ACROSS FLATS X .125 THICK (2) △7

CORROSION RESISTANT STEEL INTERNAL TOOTH LOCKWASHER, .87 DIA X .022 REF THICK △7

CORROSION RESISTANT STEEL KEYING WASHER, .87 DIA X .040 THICK, TAB .110 WIDE △7 (MS25081C6)

5/8–24 UNEF THREAD TO WITHIN .125 OF SHOULDER

4-48 UNF X.175 LONG ROUND HEAD TERMINAL SCREW AND LOCKWASHER (6)

NOTES
1 - CORROSION RESISTANT STEEL ENCLOSURE
2 - SWITCH SEALED PER MIL-PRF-8805 SYMBOL 4
△3 TO ADJUST ROLLER DIRECTION, REMOVE ROLLER GUIDE LOCK RING, SCREW ROLLER GUIDE DOWN AS FAR AS POSSIBLE, THEN UNSCREW TO DESIRED DIRECTION. SECURE BY REPLACING ROLLER GUIDE LOCK RING
4 - CIRCUIT DIAGRAM AND CATALOG LISTING ARE SHOWN ON NAMEPLATE
5 - COINCIDENCE OF OPERATING AND RELEASING POINTS: .010 OF PLUNGER TRAVEL
△6 SPECIAL CUSTOMER NAMEPLATE
△7 HARDWARE MAY BE PACKAGED UNASSEMBLED PER MIL-PRF-8805

THIS DRAWING COVERS A PROPRIETARY ITEM AND IS THE PROPERTY OF MICRO SWITCH, A DIVISION OF HONEYWELL. THIS DRAWING IS NOT TO BE COPIED OR USED WITHOUT THE APPROVAL OF MICRO SWITCH.

THIRD ANGLE PROJECTION

SCALE FULL

DO NOT SCALE PRINT

TOLERANCES
APPLY TO DESIGN UNITS. CONVERSIONS ARE ONLY FOR REFERENCE. UNLESS NOTED TOLERANCES ARE ±

	DIM. mm	TOL. mm/in	DIM. in	TOL. mm/in
NO PLACES	X	1/64		
ONE PLACE	X.X	0.4/.016	X.X	0.4/.00
TWO PLACES	X.XX	0.16/.006	X.XX	0.30/.012
THREE PLACES			X.XXX	0.13/.005
ANGLES				

DESIGN UNITS SI METRIC ☐ US CUSTOMARY ■

RAW MATERIAL–COMMERCIAL STANDARD
MICRO SWITCH STANDARDS APPLY

DIMENSIONS ARE TO BE MET BEFORE PROTECTIVE COATINGS ARE APPLIED

WEIGHT 4.5 OZ MAX

CHARACTERISTICS

OPERATING FORCE	3-6 LB
FULL OVERTRAVEL FORCE	17 LB MAX
RELEASE FORCE	2 LB MIN
PRETRAVEL	.040 MAX
DIFFERENTIAL TRAVEL	.020 MAX
OVERTRAVEL	.250 MIN

ELECTRICAL DATA

CONTACT ARRANGEMENT
S PNC (2)

LOAD	28 VDC SEA LEVEL	28 VDC 50,000 FT.
RES	4	4
IND	2	2
MOTOR	4	

M

DRAWING NUMBER: 21EN51-S
ISSUE 18
RELEASE NO. SR-11272
REPLACES

REVISIONS
A CO 44351 S L B 14 SEPT 79
B CO 47873 PART 4 RJH 8 AUG 80
C CO 53204 G J W 8 APRIL 83
D CO 54265 T S K 19 DEC 83
E CO 74101 D A W 10 FEB 93
F CO-77504-C DLT 28 JUL 94
G CO 82106 G J W 20 FEB 96
H 0010773 TCC/AP 25 JAN 05

CHECK
CHECK
CHECK
CHECK

DRAWN S L B 13 SEPT 79

FO-5285-1-A