MICRO SWITCH
FREEPORT ILLINOIS, U.S.A
A DIVISION OF HONEYWELL
FED. MFG. CODE 91929

SWITCH - BASIC

CATALOG LISTING
BA-R138-A2

ABE0165

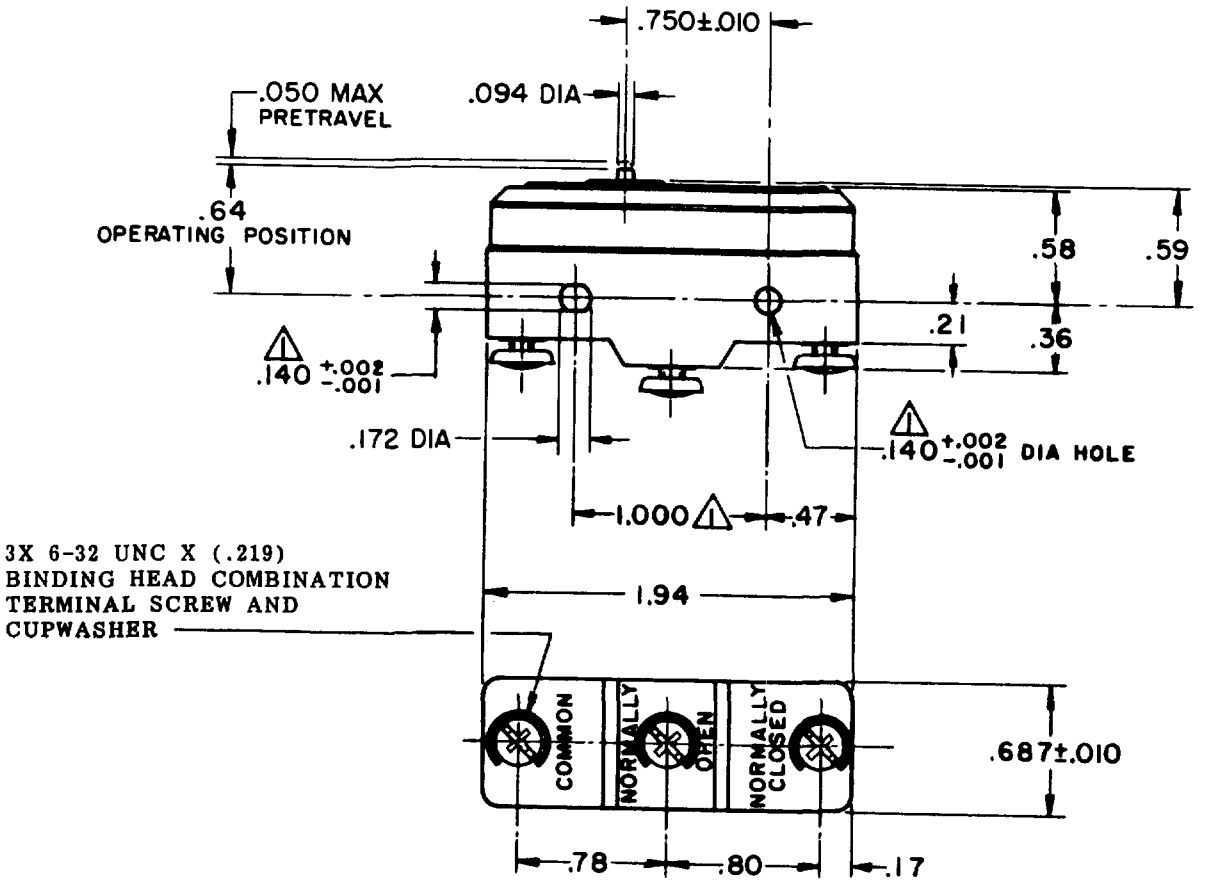

NOTES

1. MOUNTING HOLES WILL ACCEPT PINS OR SCREWS OF .139 MAX DIA ON 1.000 CENTERS
2. PLASTIC MATERIAL USED:
   - CASE - - - - DUREZ 16274 OR EQUIVALENT (NORMALIZED)
   - COVER - - - - GE 12983 OR EQUIVALENT (NORMALIZED)
   - PLUNGER - - - GE EF-4530 OR EQUIVALENT

THIS DRAWING COVERS A PROPRIETARY ITEM AND IS THE PROPERTY OF MICRO SWITCH, A DIVISION OF HONEYWELL. THIS DRAWING IS NOT TO BE COPIED OR USED WITHOUT THE APPROVAL OF MICRO SWITCH.

CHARACTERISTICS

OPERATING FORCE - - - - - - - - - 11-17 OZ

RELEASE FORCE - - - - - - - - - - 10 OZ MIN

DIFFERENTIAL TRAVEL - - - - .0015-.0025

OVERTRAVEL - - - - - - - - - - - .010 MIN

ELECTRICAL DATA

CONTACT ARRANGEMENT
S P D T

-L17- 20A-125, 250 OR 480 VAC
3/4HP-125 VAC; 1 1/2HP-250 VAC

-L288-
-L315-

-L308- 20(3)A 250V ~ T85 5E4

SCALE FULL

DO NOT SCALE PRINT

UNLESS OTHERWISE NOTED
DIMENSIONS ARE IN INCHES

TOLERANCES ARE:

ONE PLACE	(.0)	±.030
TWO PLACE	(.00)	±.015
THREE PLACE	(.000)	±.005
ANGLES		±

WEIGHT .063 LB

CATALOG LISTING
BA-R138-A2
PAGE 1 OF 1

M

DRAWING NUMBER

ISSUE 7

REPLACES

RELEASE NO. PR-1822

REVISIONS			
A	CO 39664	RNS 2 MAR 78	30SEP05
B	CO-73287-J	JAL 22 NOV 93	
C	C093346	DLT 18 AUG 98	VA
D	203976	CSL 24 SEP 01	CHECK
E	204994	GJW 11 MAR 02	71
F	0015539	BM 30SEP05	22 APR 71

DRAWN 22 APR 71
CHECK
71 APR 21
DRAWN OMW

RASTER
0-50378-1A