MICRO SWITCH
FREEPORT, ILLINOIS, U.S.A.
A DIVISION OF HONEYWELL
FED. MFG. CODE 91929

SWITCH-BASIC

CATALOG LISTING
BE-R24-A4

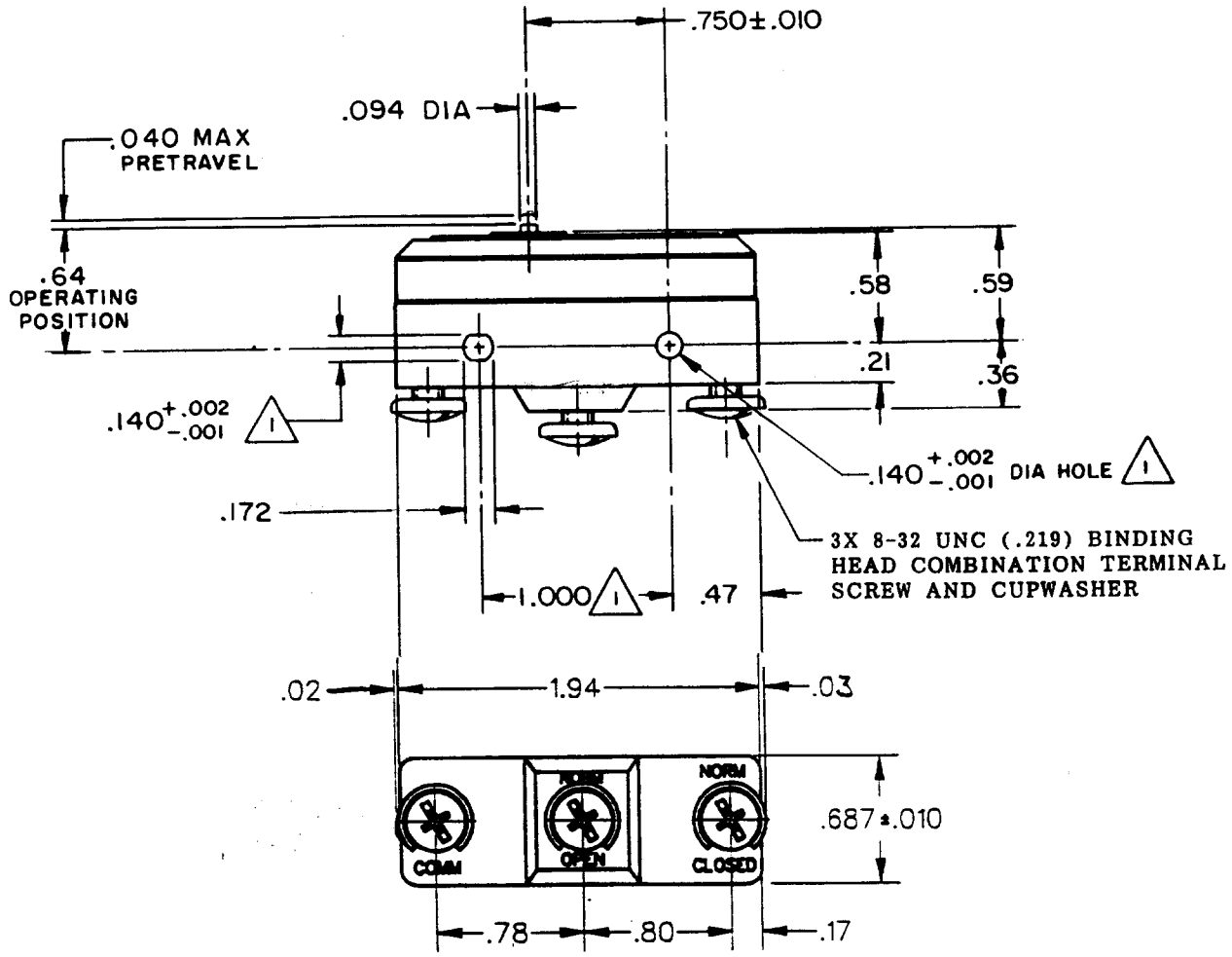

NOTE -
1 MOUNTING HOLES WILL ACCEPT PINS OR SCREWS OF .139 MAX DIA ON 1.000±.002 CENTERS
2- SWITCH WILL WITHSTAND TEMPERATURE OF 275°F

THIS DRAWING COVERS A PROPRIETARY ITEM AND IS THE PROPERTY OF MICRO SWITCH, A DIVISION OF HONEYWELL. THIS DRAWING IS NOT TO BE COPIED OR USED WITHOUT THE APPROVAL OF MICRO SWITCH.

CHARACTERISTICS

OPERATING FORCE — — — — — 11-17 OZ
RELEASE FORCE — — — — 10 OZ MIN
DIFFERENTIAL TRAVEL — — .0015-.0025
OVERTRAVEL — — — — — — — .010 MIN

ELECTRICAL DATA

CONTACT ARRANGEMENT
S P D T

25A-125, 250 OR 480 VAC
3/4 HP-125 VAC; 1½ HP-250 VAC
PILOT DUTY: 375 VA-125, OR 250 VAC
60/75°C (Cu)

SCALE FULL
DO NOT SCALE PRINT

UNLESS OTHERWISE NOTED
DIMENSIONS ARE IN INCHES
TOLERANCES ARE:

ONE PLACE	(.0)	±.030
TWO PLACE	(.00)	±.015
THREE PLACE	(.000)	±.005
ANGLES		±

WEIGHT .063 LB

BE-R24-A4
REPLACES
RELEASE NO. SR 11992
DRAWING NUMBER M
ISSUE

REVISIONS

A	SR11992	MBF 6 OCT 65	
B	C036627	CJH 5 APR 76	11 OCT 65
C	CO 58782	WJM 24 JAN 86	
D	CO-73287-G	JAL 20 OCT 93	
E	CO-77591	DAW 22 JUN 94	
F	CO-79599E	JJA 24 FEB 95	11 OCT 65

CHECK
EAD
CHECK
LSD
CHECK
DRAWN MBF 6 OCT 65

FO-30378