**MICRO SWITCH**
FREEPORT ILLINOIS, U.S.A
A DIVISION OF HONEYWELL
FED. MFG. CODE 91929

# SWITCH–BASIC

CATALOG LISTING
**BZ-2RD-PC2**

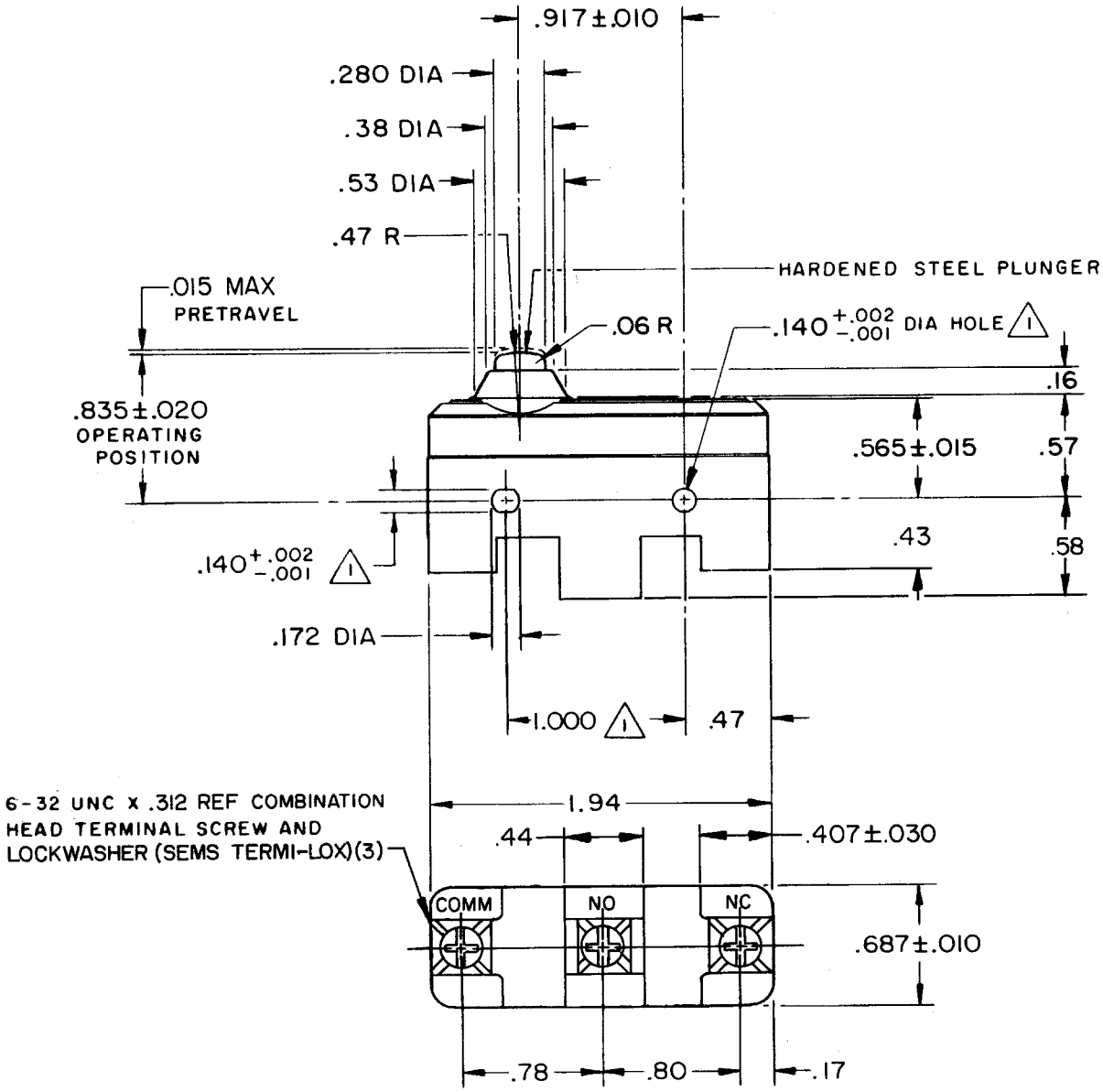


NOTE
1 MOUNTING HOLES WILL ACCEPT PINS OR SCREWS OF .139 MAX DIA ON 1.000±.002 CENTERS

THIS DRAWING COVERS A PROPRIETARY ITEM AND IS THE PROPERTY OF MICRO SWITCH, A DIVISION OF HONEYWELL. THIS DRAWING IS NOT TO BE COPIED OR USED WITHOUT THE APPROVAL OF MICRO SWITCH.

## CHARACTERISTICS

OPERATING FORCE——————9-13 OZ
RELEASE FORCE——————4 OZ MIN
DIFFERENTIAL TRAVEL——.0004–.0020
OVERTRAVEL——————.060 MIN

## ELECTRICAL DATA

CONTACT ARRANGEMENT
S P D T

15A-125, 250 OR 480 VAC, 2A-600 VAC
1/8 HP-125 VAC; 1/4 HP-250 VAC
1/2A-125 VDC; 1/4A-250 VDC
CODE L74
L288
L299 16A 250V ~ T85 5E4
L306

SCALE FULL
DO NOT SCALE PRINT

UNLESS OTHERWISE NOTED
DIMENSIONS ARE IN INCHES
**TOLERANCES ARE**

| | | |
|---|---|---|
| ONE PLACE | (.0) | ±.030 |
| TWO PLACE | (.00) | ±.015 |
| THREE PLACE | (.000) | ±.005 |
| ANGLES | | ± |

WEIGHT .064 LB

REPLACES X48926-BZ
RELEASE NO. PR-3904-T
M BZ-2RD-PC2 PAGE 1 OF 1
DRAWING NUMBER
8 ISSUE

REVISIONS

| | | |
|---|---|---|
| A | PR-3904 | K P K 14 MAR 74 |
| B | C038927 | C E B 25 JULY 77 |
| C | C054223 | CJH 17 NOV 83 |
| D | CO-67851-A | BAB. 15 AUG 90 |
| E | CO-77592 | DAW 15 AUG 94 |
| F | C093346 | D L T 1 SEP 98 |

CHECK
CHECK
CHECK
L S D 15 MAR '74
CHECK 74
K P K 12 MAR 74 DRAWN
FORMTEK FO-52848