Kit contents

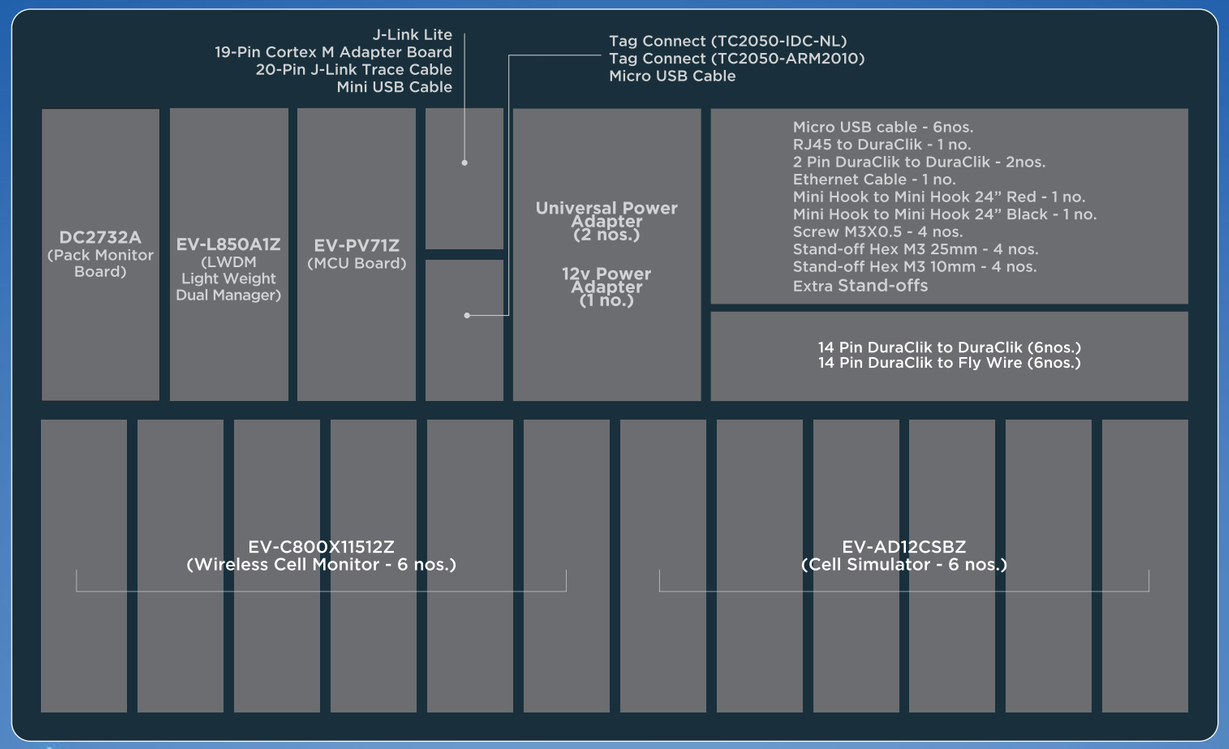

References:

wBMS EV-K800A0-1512AZ Kit User Guide (EE-NWK-014), Analog Devices, Inc.

Getting Started with wBMS Kits (EE-NWK-031), Analog Devices, Inc.

wBMS Explorer Getting Started Guide (EE-NWK-020), Analog Devices, Inc.

ADRF88x0 wBMS System Brief (EE-NWK-005), Analog Devices, Inc.

LTC6820 isoSPI Isolated Communications Interface. Rev. C, May 2019, Analog Devices, Inc.
https://www.analog.com/media/en/technical-documentation/data-sheets/LTC6820.pdf

Demo Manual DC2732A, LTC2949 Battery Stack Monitor, Analog Devices, Inc.
https://www.analog.com/media/en/dsp-documentation/evaluation-kit-manuals/DC2732A.pdf

ANALOG DEVICES
AHEAD OF WHAT'S POSSIBLE™

wBMS

ANALOG DEVICES
AHEAD OF WHAT'S POSSIBLE™

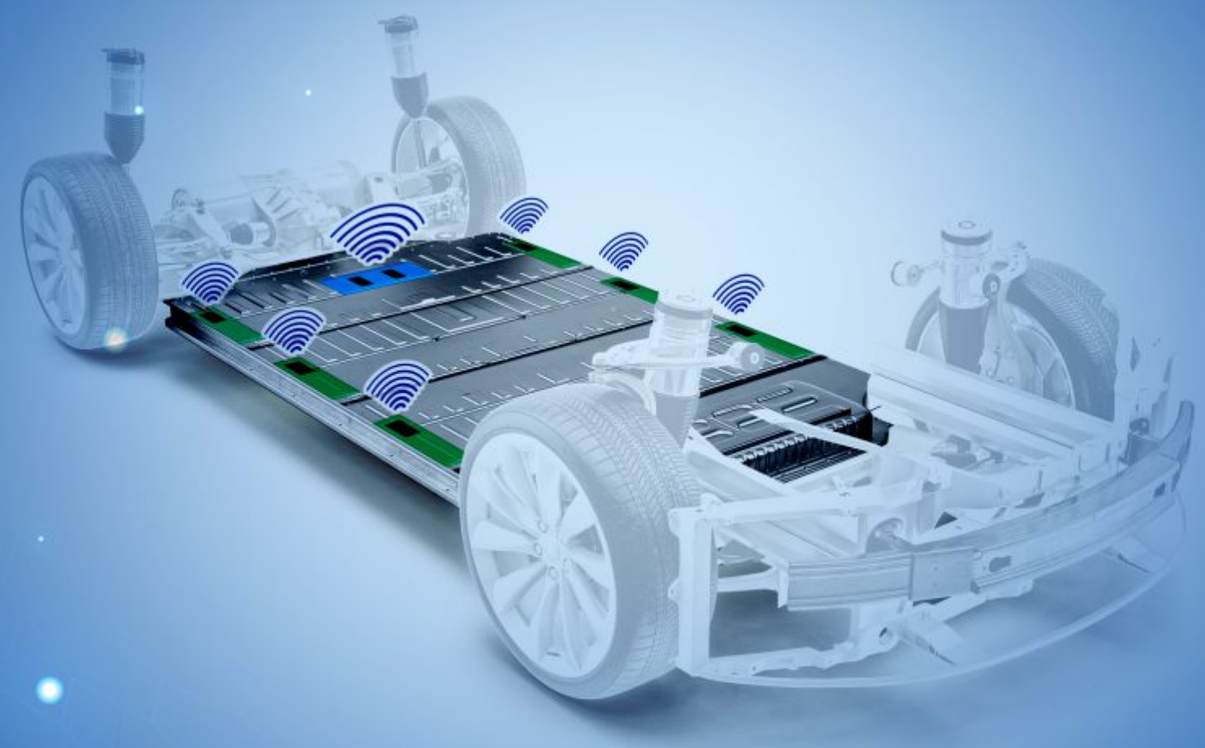

wBMS
Evaluation Kit
EV-K800A0-1512AZ

Cell Sensing • Wireless Connectivity • Pack Monitoring

ANALOG DEVICES
AHEAD OF WHAT'S POSSIBLE™

wBMS

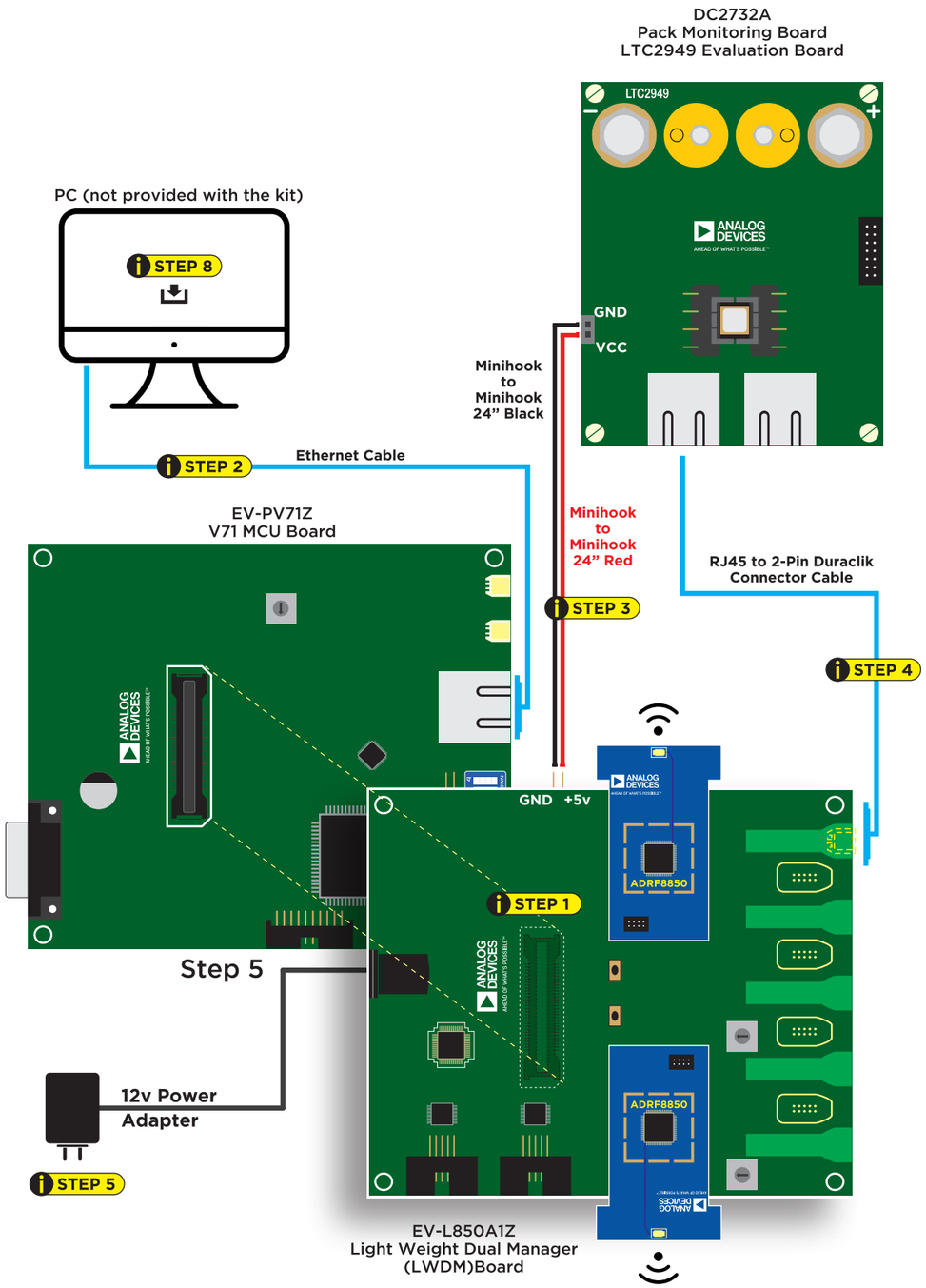

wBMS Evaluation Kit Quick Start Guide

Follow the instructions for setting up the wbms Eval Kit and to view BMS data on the explorer

Step 1: Connect LWDM and MCU boards using hirose connectors on the board. Use the stand-offs and screws to ensure stable connection

Step 2: Connect MCU board and PC using ethernet cable provided in the kit

Step 3: Connect the LWDM board to DC2732A using Minihook to Minihook Red & Black Cables

Step 4: Connect the LWDM board to DC2732A using RJ45 to 2-Pin DuraClik Connector Cable

Step 5: Power on the LWDM board using the 12v adapter provided in the kit

Step 6: Connect the WCM board to the Cell Simulator board using 14 pin DuraClik to DuraClik cable provided in the kit (repeat for all the 6 sets of WCM and CS board)

Step 7: Power on the CS board using Micro USB cable provided in the kit - repeat for all 6 CS boards.

Step 8: Download wBMS software, Configure Ethernet Network Setting in PC with Static IP and configure ACL. All 6 nodes should appear on the wBMS explorer window on the PC (refer EE-NWK-031 for details)

Step 9: Turn the knob on the CS to observe change in the BMS data on the explorer

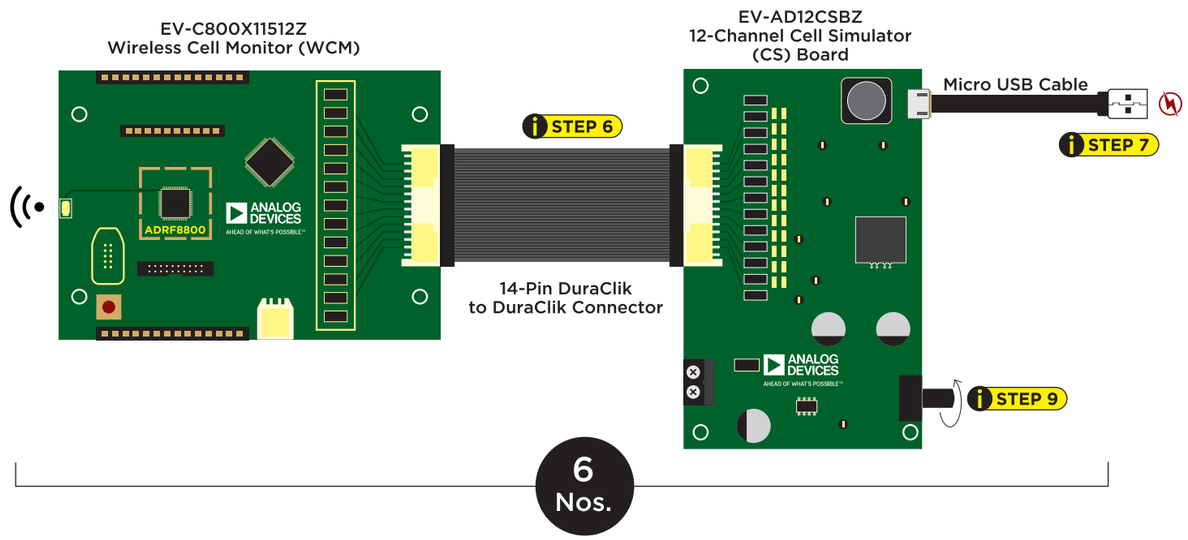

Disclaimer: The wBMS Evaluation Kit and wBMS Explorer application are for evaluation purposes only, and not to be used for production. They are not intended to be used outside the lab environment.