Vertical DIN Rail enclosures: CVB

PRODUCT OVERVIEW

- Designed for 5mm pitch terminal blocks
- Two sizes, 22.5mm or 45mm wide
- Solid and perforated plates to cover unused terminal areas
- Three sides accept 12-way terminal blocks each side
- Complete box contains one 12-way closed, three 4-way closed and three 4-way perforated plates

CVB225

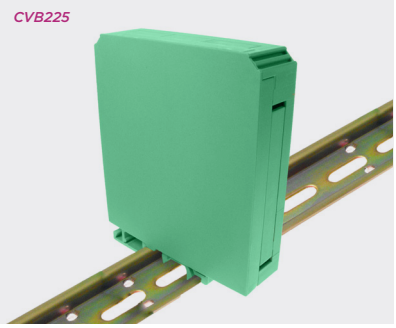

CVB450

SPECIFICATION	
Rating terminals	8A/250VAC
Cable entry	2x2.5mm² solid or standard
Terminal protection	IP20
Material	PA66 UL94-V0
Recommended terminal blocks	CTBP9350/8, CTBP9200/8, CTBP9350/12 and CTBP9200/12

CVBMSC

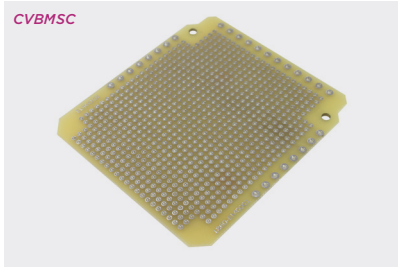

PART NO. (KIT)	DESCRIPTION	SIZE
CVB225/KIT	Includes x1 CVB BASE, x1 CVB TOP225, x3 CVB BLIND PLATE, x3 CVB VENT PLATE, x1 CVB BLIND PLATE LONG	22.5mm x82mm x 101.75mm
CVB450/KIT	Includes x1 CVB BASE, x1 CVB TOP450, x3 CVB BLIND PLATE, x3 CVB VENT PLATE, x1 CVB BLIND PLATE LONG	45mm x 82mm x 101.75mm

PART NO.	DESCRIPTION	SIZE
CVBMSC	Prototyping board	See below

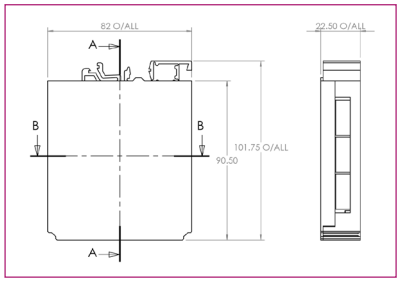

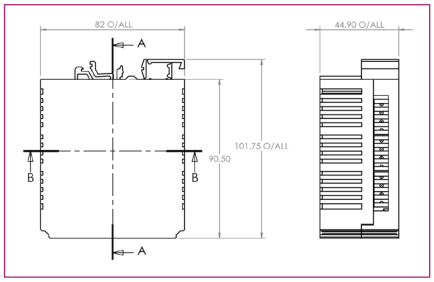

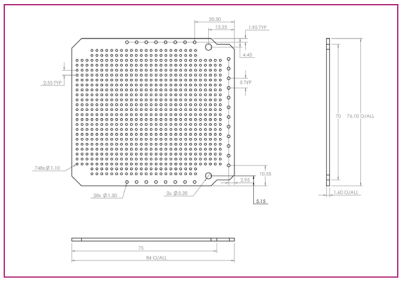

PART NO. (INDIVIDUAL PIECE PARTS)	DESCRIPTION
CVB BASE	Base
CVB TOP225	225 Top
CVB TOP450	450 Top
CVB BLIND PLATE	4 way Solid Plate
CVB VENT PLATE	4 way Vented Plate
CVB BLIND PLATE LONG	12 way Solid Plate

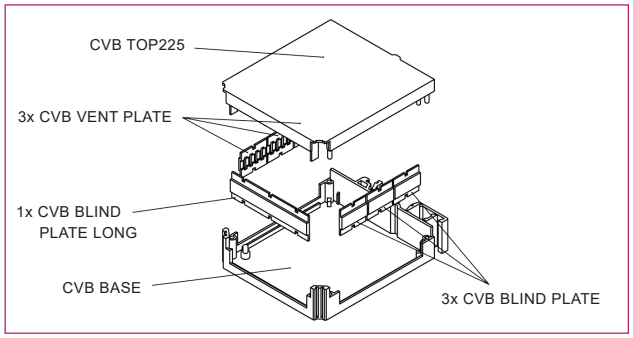

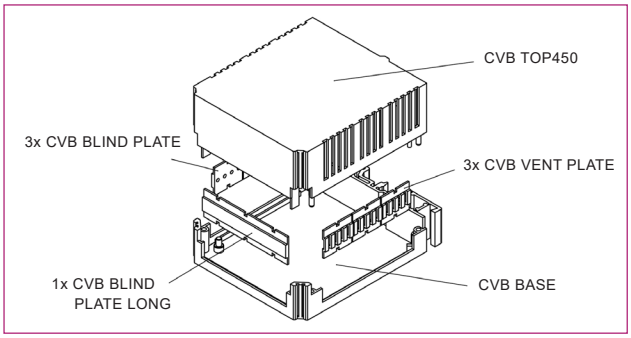

KEY FEATURES

PA66 UL94-V0 | Designed for 5mm pitch terminal blocks

CUSTOMISE ME PRINTING · CUSTOMISE ME DRILLING