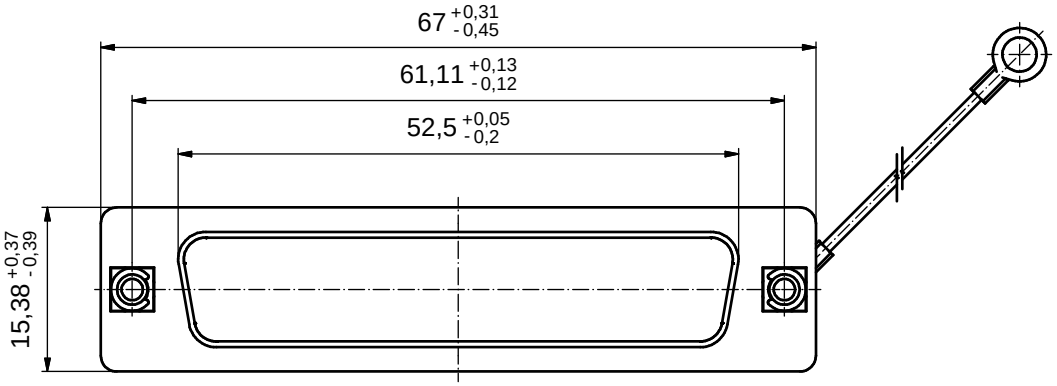

(5 : 1)

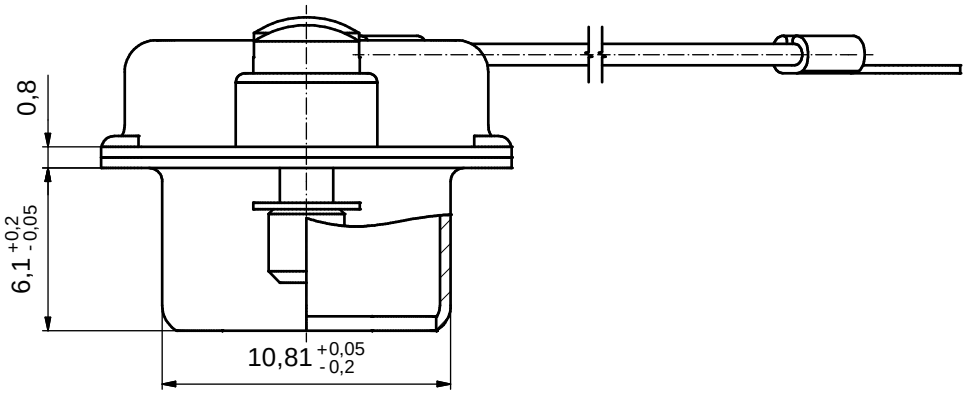

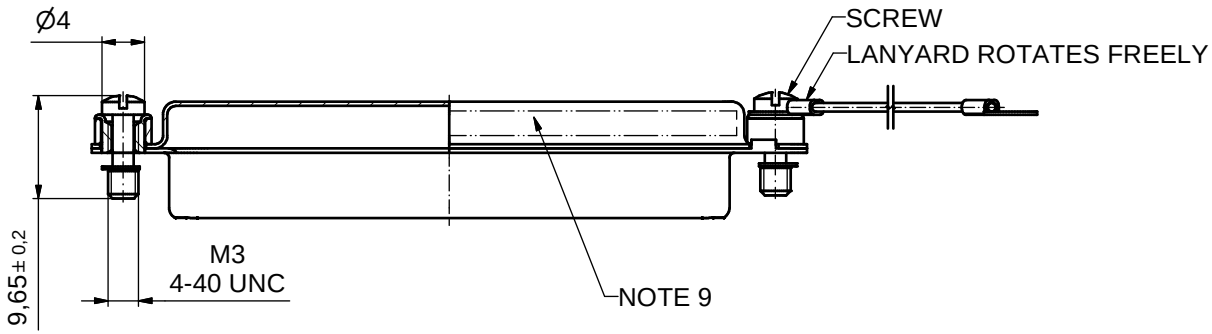

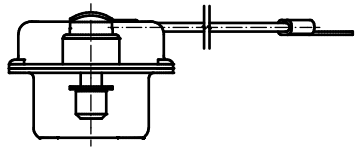

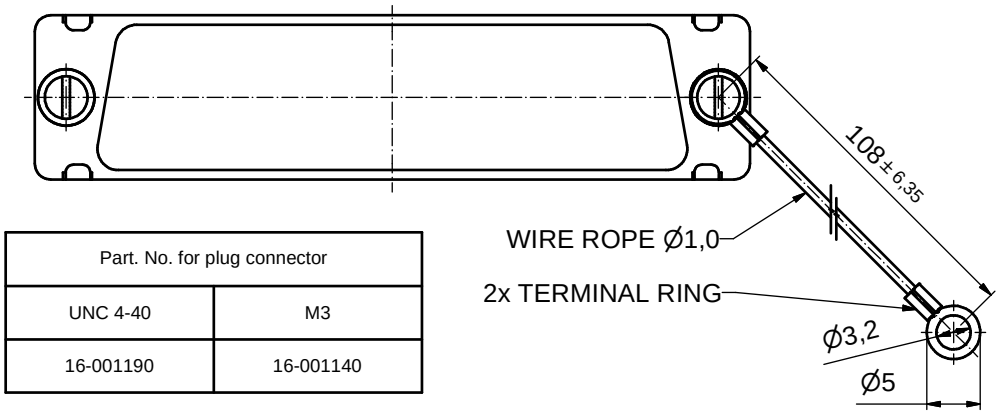

Part. No. for plug connector	
UNC 4-40	M3
16-001190	16-001140

NOTES:

1. METALSHELLS: STEEL; min. 315µin TIN over 40-80µin NICKEL
2. THREADED INSERT: COPPER ALLOY; min. 200µin TIN over 80µin NICKEL
3. COLLAR: COPPER ALLOY; min. 200µin TIN over 80µin NICKEL
4. SCREW: STEEL; NICKEL PLATED
5. WIRE ROPE: STAINLESS STEEL 1.4401
6. RETAINING WASHER: STAINLESS STEEL 1.4122
7. TERMINAL RING: UNINSULATED, COPPER ALLOY; min. 200µinTIN over 80µin NICKEL
8. MAXIMUM TORQUE VALUE FOR THREAD: 6in.LB
9. CONNECTOR IS PART MARKED: PART NO. CONEC ABC

Directive 2002/95/EC „RoHS" Compliant

THIS DRAWING MAY NOT BE COPIED OR REPRODUCED IN ANY WAY, AND MAY NOT BE PASSED ON TO A THIRD PARTY WITHOUT WRITTEN PERMISSION. OWNERSHIP AND COPYRIGHT OF CONEC GmbH

DO NOT ALTER CAD DRAWING BY HAND

rev.	description	date	name
a	Origin		

tolerance ISO 2768-m

dim. in mm

	date	name
drawn	20.11.08	Petker
appd.	20.11.08	Fischer
norm		
d-old		

CONEC

scale: 2:1 (5:1)

material: SEE NOTES

title:

SCREEN CAP

50pos. FOR PLUG CONNECTOR

with threaded insert, screw and wire rope

dwg no: 16K1A2404

Inventor 10

DIN-A3

sh: 1

part no: see table