NOTES:

1. MATERIALS OF CONSTRUCTION:
   BODY, RING = BRASS, GOLD PLATED
   CONTACT PIN = BeCu, GOLD PLATED
   INSULATORS (2) . PTF PER MIL-P-19468

901-144-8RFX	REVISIONS				
DRAWING NO.	REV	DESCRIPTION	DATE	ECO	APPR
THIRD ANGLE PROJ.	A	RELEASE TO MFG.	1-25-01	43650	CPM

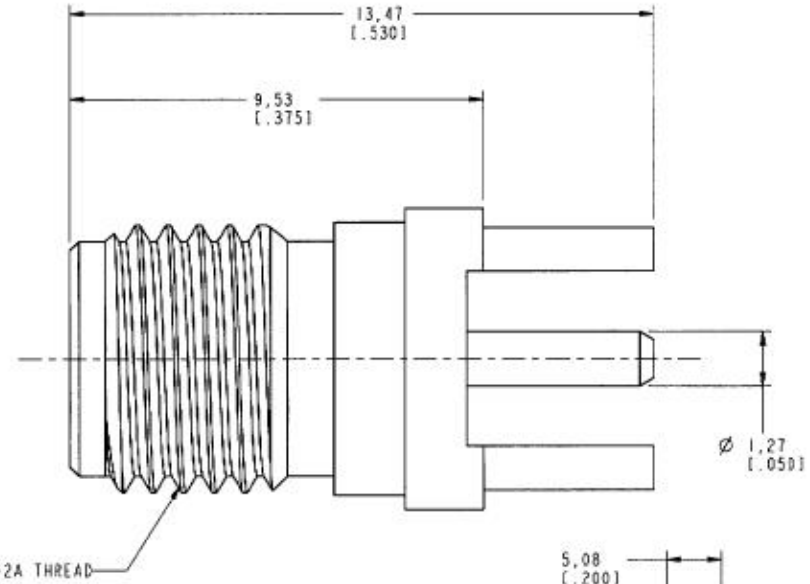

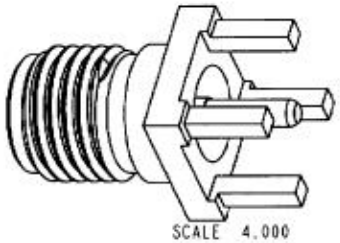

SCALE 4.000

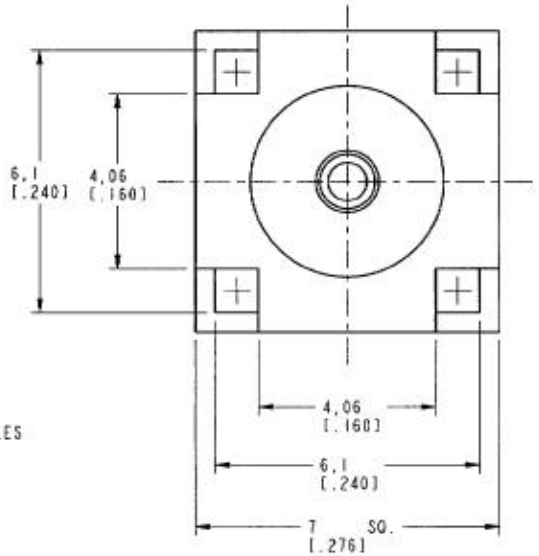

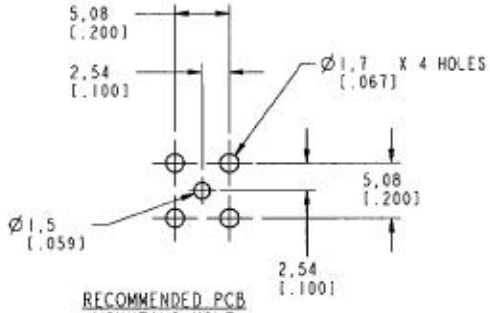

RECOMMENDED PCB MOUNTING HOLE
SCALE 2.000

CUSTOMER OUTLINE DRAWING
FOR REFERENCE ONLY

UNLESS OTHERWISE SPECIFIED, DIMENSIONS ARE IN INCHES AND TOLERANCES ARE:

0.5 - 6mm	6 - 30mm	30 - 120mm
±0.2mm	±0.4mm	± 0.6mm

NOTICE - These drawings, specifications, or other data (1) are, and remain the property of Amphenol Corp. (2) must be returned upon request; and (3) are confidential and not to be disclosed to any person other than those to whom they are given by Amphenol Corp. The furnishing of these drawings, specifications, or other data by Amphenol Corp., or to any other person to anyone for any purpose is not to be regarded by implication or otherwise in any manner licensing, granting rights or permitting such holder or any other person to manufacture, use or sell any product, process or design, patented or otherwise, that may in any way be related to or disclosed by said drawings, specifications, or other data.

MATERIAL

REFERENCE
GEN# 901-144-8RFX_ASSY
EAR 967698-0

DRAWN	DATE
C. McGRATH	1/10/01
ENGINEER	DATE
O. BARTHELMES	1/10/01
APPROVED	DATE
[signature]	1/25/01

CAD FILE
I:\SMA\ 901-144-8RFX

TITLE
SMA PCB MOUNT JACK

Amphenol
Amphenol Corporation
Communication and Network Products Division
Danbury, CT U.S.A. 06810

SCALE: 8.0:1 | SHEET 2 OF 2

CODE ID	DWG SIZE	DRAWING NO.	REV
74868	B	901-144-8RFX	A