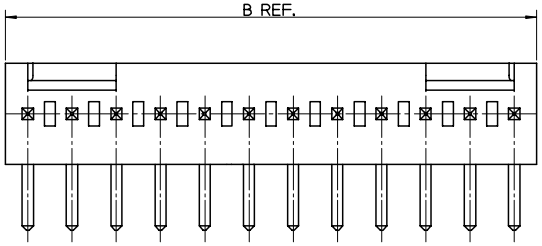

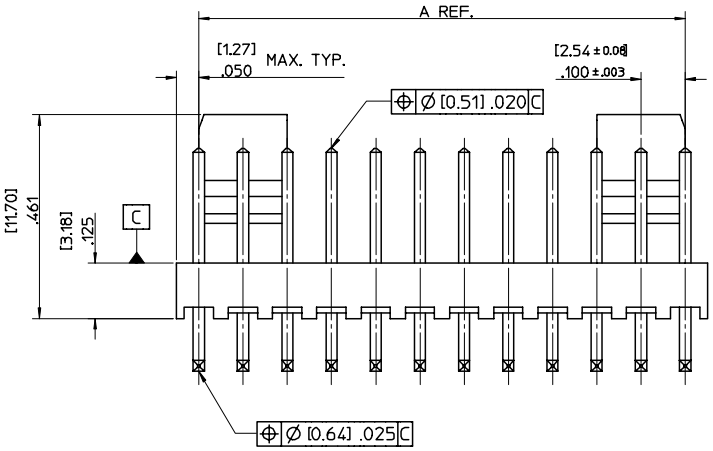

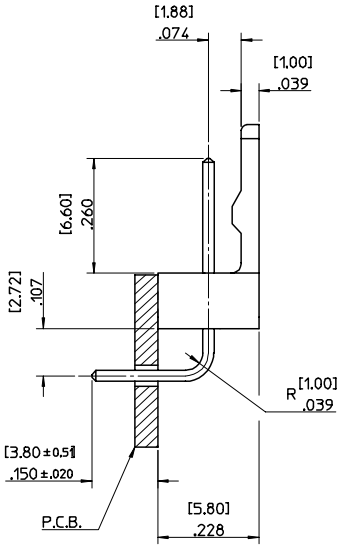

NO. OF CCTS	DIM. A	DIM. B	PIN FINISH: [0.005]/0.0002 MIN. TIN OVER [0.003]/0.0001 MIN. COPPER		PIN FINISH: [0.0005]/0.00002 MIN. GOLD OVER [0.0008]/0.00003 MIN. NICKEL	
			ENG. NO.	PART NO.	ENG. NO.	PART NO.
2	2.54/.100	5.08/.200	AE-7395-2B	22-05-7028	AE-7395-2BG	22-12-4022
3	5.08/.200	7.62/.300	AE-7395-3B	22-05-7038	AE-7395-3BG	22-12-4032
4	7.62/.300	10.16/.400	AE-7395-4B	22-05-7048	AE-7395-4BG	22-12-4042
5	10.16/.400	12.70/.500	AE-7395-5B	22-05-7058	AE-7395-5BG	22-12-4052
6	12.70/.500	15.24/.600	AE-7395-6B	22-05-7068	AE-7395-6BG	22-12-4062
7	15.24/.600	17.78/.700	AE-7395-7B	22-05-7078	AE-7395-7BG	22-12-4072
8	17.78/.700	20.32/.800	AE-7395-8B	22-05-7088	AE-7395-8BG	22-12-4082
9	20.32/.800	22.86/.900	AE-7395-9B	22-05-7098	AE-7395-9BG	22-12-4092
10	22.86/.900	25.40/1.000	AE-7395-10B	22-05-7108	AE-7395-10BG	22-12-4102
11	25.40/1.000	27.94/1.100	AE-7395-11B	22-05-7118	AE-7395-11BG	22-12-4112
12	27.94/1.100	30.48/1.200	AE-7395-12B	22-05-7128	AE-7395-12BG	22-12-4122
13	30.48/1.200	33.02/1.300	AE-7395-13B	22-05-7138	AE-7395-13BG	22-12-4132
14	33.02/1.300	35.56/1.400	AE-7395-14B	22-05-7148	AE-7395-14BG	22-12-4142
15	35.56/1.400	38.10/1.500	AE-7395-15B	22-05-7158	AE-7395-15BG	22-12-4152
16	38.10/1.500	40.64/1.600	AE-7395-16B	22-05-7168	AE-7395-16BG	22-12-4162
17	40.64/1.600	43.18/1.700	AE-7395-17B	22-05-7178	AE-7395-17BG	22-12-4172
18	43.18/1.700	45.72/1.800	AE-7395-18B	22-05-7188	AE-7395-18BG	22-12-4182
19	45.72/1.800	48.26/1.900	AE-7395-19B	22-05-7198	AE-7395-19BG	22-12-4192
20	48.26/1.900	50.80/2.000	AE-7395-20B	22-05-7208	AE-7395-20BG	22-12-4202

NOTES:-
1. MATERIALS:
   WAFER: NYLON 6/6, UL 94, V-0, NATURAL COLOUR
   PIN: [0.64]/0.25 SQUARE HARD DRAWN BRASS
   FINISH: SEE CHART
2. PIN SOLDERABILITY PER MOLEX SPECIFICATION NUMBER 152
3. PIN PUSH OUT FORCE [0.907 KG]/2.0 LBS MIN.
4. PARTS TO BE FLAT WITHIN [0.13]/.005 IN/IN
5. WAFERS STACKABLE END TO END

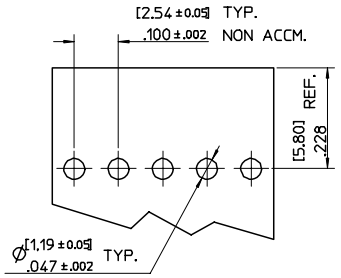

RECOMENDED P.C.B. BOARD

AE-7395-N B _

NO. OF CCTS.

WAFER ASSY. OPTION

PLATING TYPE
BLANK: TIN
G: GOLD

ORIGINAL RELEASE
EC NO: E2005-1071 2005/06/20
DRWN: JDENNEHY 2005/06/20
CHKD: GMCSWEENEY 2005/07/07
APPR: JDENNEHY
DESCRIPTION
REV A

QUALITY SYMBOLS
▼=0
▽=0

GENERAL TOLERANCES (UNLESS SPECIFIED)

	mm	INCH
4 PLACES	± ---	± ---
3 PLACES	± ---	± .010
2 PLACES	± 0.25	± .015
1 PLACE	± 0.38	± ---
ANGULAR ± 2 °		

DRAFT WHERE APPLICABLE MUST REMAIN WITHIN DIMENSIONS

DIMENSION STYLE: MM ONLY
SCALE: 5:1
DESIGN UNITS: METRIC
THIRD ANGLE PROJECTION

DRAWN BY: JDENNEHY DATE: 2005/05/13
CHECKED BY: GMCSWEENEY DATE: 2005/05/27
APPROVED BY: JDENNEHY DATE: 2005/05/27

TITLE: WAFER, R/A FRICTION LOCK (2.54)/.100 CENTERS (0.64)/.025 SQ. PIN

MOLEX INCORPORATED

MATERIAL NO.: SEE CHART
DOCUMENT NO.: SD-7395-001
SHEET NO.: 1 OF 1
SIZE: A2

THIS DRAWING CONTAINS INFORMATION THAT IS PROPRIETARY TO MOLEX INCORPORATED AND SHOULD NOT BE USED WITHOUT WRITTEN PERMISSION