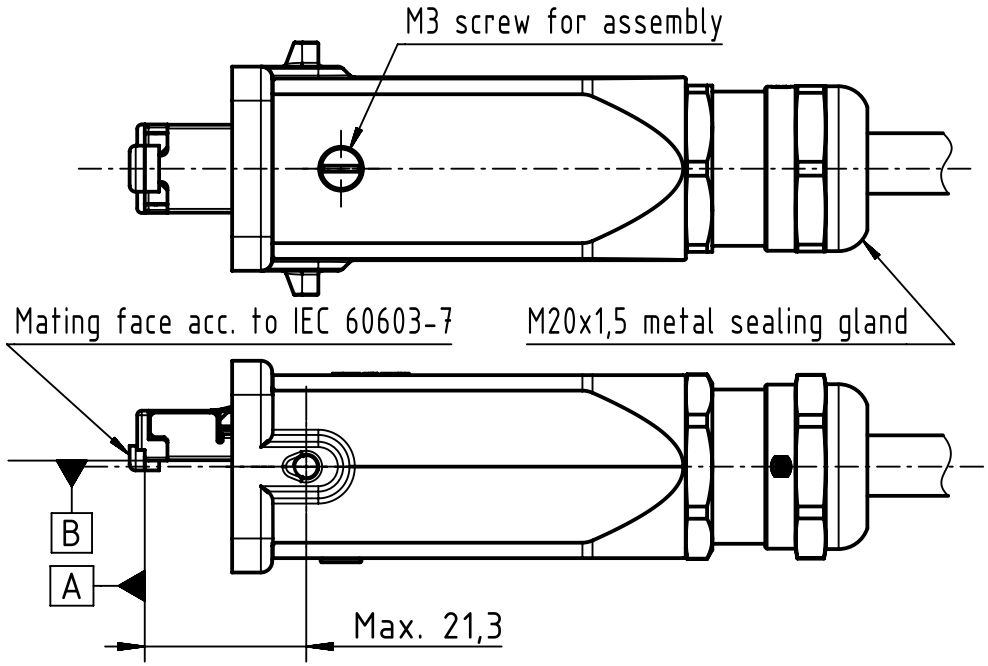

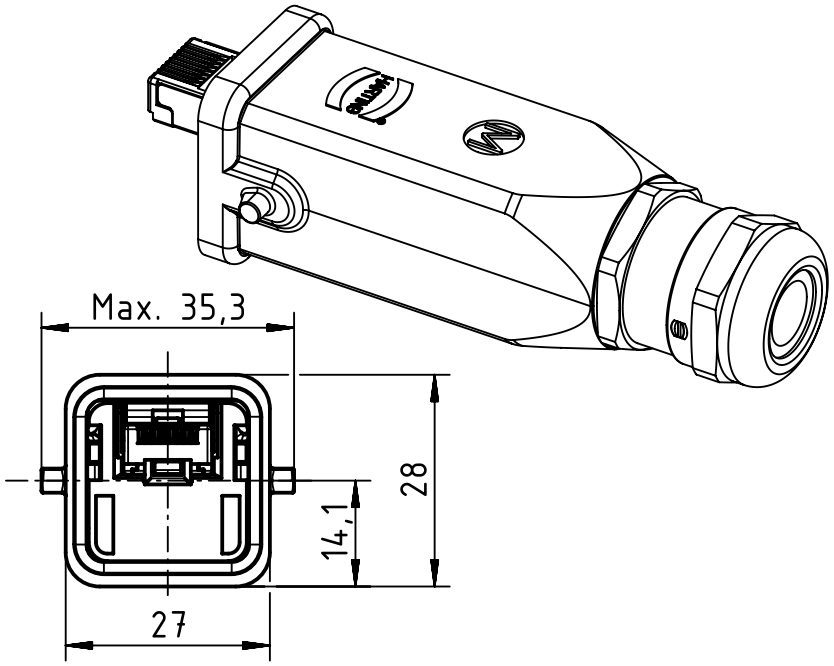

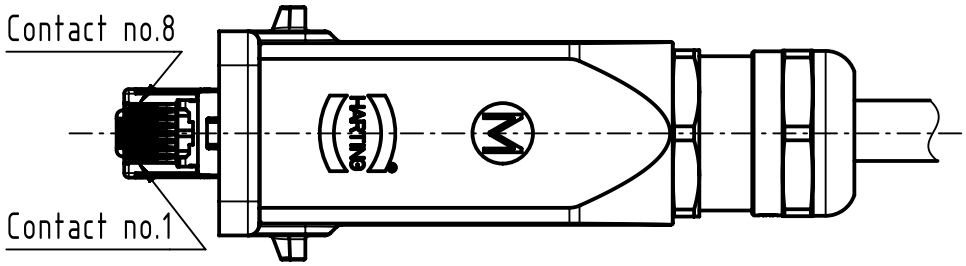

- For solid and stranded conductors (AWG27 up to AWG22)
- Max. wire diameter 1,5mm
- Cable diameter 5 to 9mm
- Degree of protection IP65/IP67
- Cat.6, Performance class E_A
- Suitable for 1/10 Gigabit Ethernet
- Temperature range: -40°C up to +70°C
- 750 mating cycles

Data contacts plating:
Au 1,27µm (50µ") over Nickel

All Dimensions in mm Original Size DIN A4	Scale 1:1	Free size tol.		Ref. Sub.	
All rights reserved Department EC PD - RO	Created by TAMAS	Inspected by POPESCUD	Standardisation HOFFMANN	Date 2017-08-30	State Final Release
HARTING Electronics GmbH D-32339 Espelkamp	Title Han3A RJ45 10G Cat6 plug 8p IDC				Doc-Key / ECM-Nr. 100229058/UGD/001/C 500000124639
	Type TB	Number 09451151560		Rev. C	Page 1/1

A4