DIALIGHT PART NO.	LED COLOR	LENS COLOR
521-8720F	YELLOW-GREEN	WATER CLEAR
521-8721F	ORANGE	WATER CLEAR
521-8751F	YELLOW	WATER CLEAR
521-8752F	TRUE GREEN	WATER CLEAR
521-8753F	BLUE	WATER CLEAR

NOTES:

1. PARTS ARE TO BE SUPPLIED IN 12mm CARRIER TAPE ON 7" REEL 1500 PCS PER REEL.
2. PIN NUMBERS ARE FOR REFERENCE ONLY, DESIGNATION NON-EXISTENT ON PART.
3. THIS ASSEMBLY CONTAINS ELECTROSTATIC DISCHARGE SENSITIVE DEVICES (ESDS). MAINTAIN ALL PRECAUTIONARY MEASURES DURING ASSEMBLY, HANDLING AND STORAGE IN ACCORDANCE WITH IPC-A-610.
4. THIS PRODUCT IS RoHS COMPLIANT. EACH BAG IS TO BE MARKED WITH RoHS COMPLIANT LABEL OR EQUIVALENT MARKINGS. LED MUST BE Pb FREE.
5. MOISTURE SENSITIVITY LEVEL IS 2.

REV	ECN NO	REVISIONS	DRN	CKD	APP	QA	CM	DATE
A	122228	NEW RELEASE	LD	CS				9-13-24

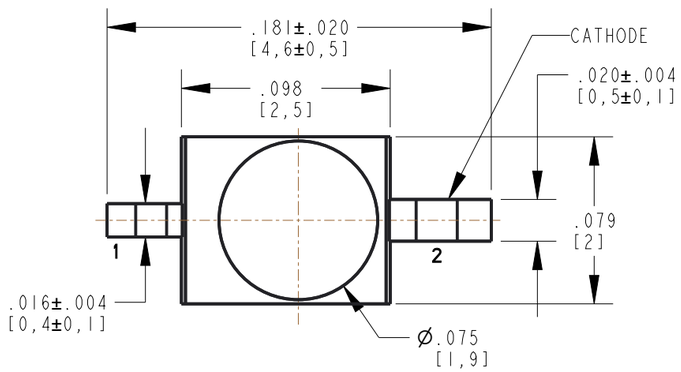

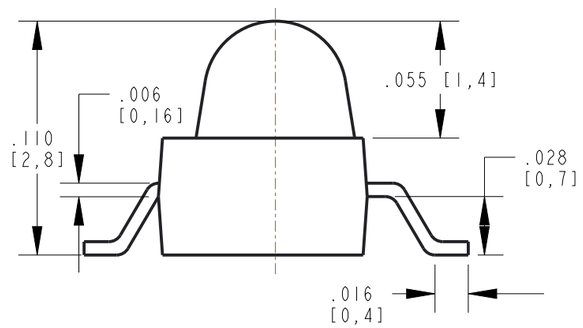

LED SCHEMATIC

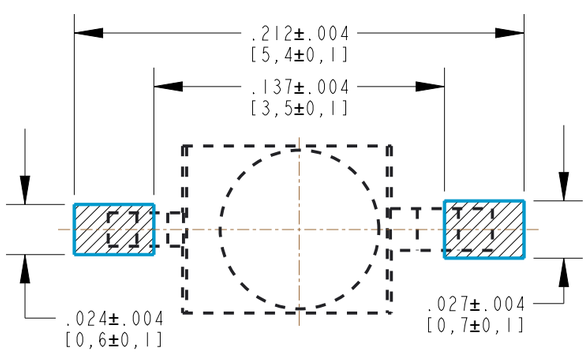

RECOMMENDED PAD LAYOUT

TAPE DIMENSION (mm)

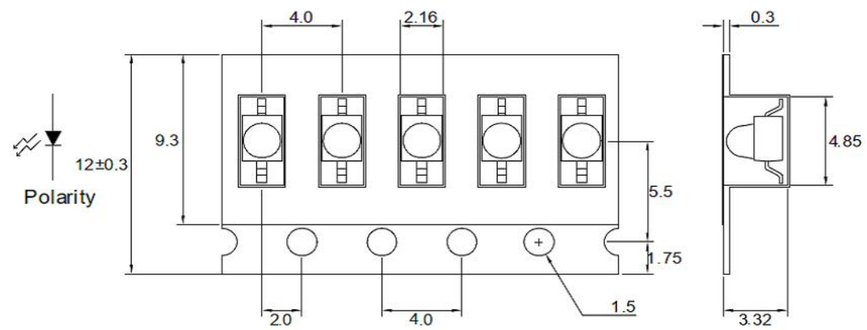

ABSOLUTE MAXIMUM RATINGS AT 25°C							
LED COLOR	POWER DISSIPATON (mW)	FORWARD CURRENT (mA)	PEAK FORWARD CURRENT *(mA)	REVERSE CURRENT (uA)@5V	ELECTROSTATIC DISCHARGE (V)	OPERATING TEMPRATURE (°C)	STORAGE TEMPRATURE (°C)
YELLOW GREEN	65	25	75	10	2000	-40 TO +85	-40 TO +100
ORANGE	65	25	60	10	2000	-40 TO +85	-40 TO +100
YELLOW	75	30	60	10	2000	-40 TO +85	-40 TO +100
TRUE GREEN	120	30	100	50	500	-20 TO +80	-30 TO +100
BLUE	120	30	100	50	500	-20 TO +80	-30 TO +100

*PEAK FORWARD CURRENT : DUTY 1/10 @10KHz

ELECTRICAL OPTICAL CHARACTERISTICS AT 25°C												
LED COLOR	TEST CONDITION	LUMINOUS INTENSITY (mcd)			DOMINANT WAVELENGTH (nm)			SPECTRAL LINE HALF-WIDTH (nm)	FORWARD VOLTAGE (V)			VIEWING ANGLE (DEG)
	I_F(mA)	MIN.	TYP.	MAX.	MIN	TYP.	MAX	TYP	MIN.	TYP	MAX.	TYP
YELLOW GREEN	20	300	700	1500	—	574	—	20	1.7	—	2.6	20
ORANGE	20	1800	3400	6200	—	605	—	17	1.7	—	2.6	
YELLOW	20	700	1500	3400	—	590	—	20	1.7	—	2.6	
TRUE GREEN	20	2200	4400	7700	—	525	—	36	—	3.5	4.0	
BLUE	20	700	1500	3400	—	470	—	30	—	3.5	4.0	

RECOMMENDED WAVE SOLDER PROFILE

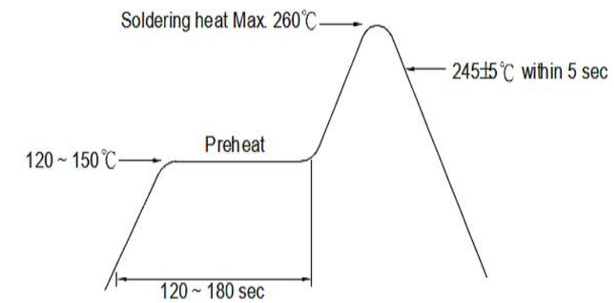

RECOMMENDED PB-FREE REFLOW SOLDER PROFILE

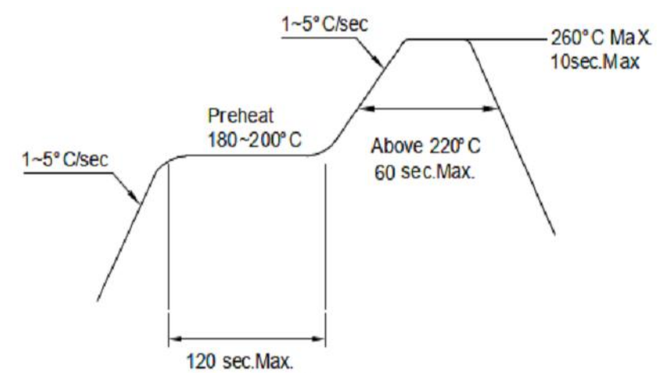

ATTENTION:
OBSERVE PRECAUTIONS FOR HANDLING ELECTROSTATIC SENSITIVE DEVICES

THIS DRAWING AND THE CONTENTS HEREIN ARE CONFIDENTIAL AND THE SOLE PROPERTY OF DIALIGHT CORP. REPRODUCTION OF THIS DRAWING OR CONSTRUCTION OF ANY PARTS WITHIN THIS DRAWING ARE FORBIDDEN WITHOUT THE WRITTEN CONSENT OF DIALIGHT CORP.

DIALIGHT CORP INTERNAL REFERENCE ONLY = 3D MODEL : 450052187XX30- .1

SCALE: 14.000

ALL DIM'S: INCH (mm)

TOLERANCES:
UNLESS OTHERWISE SPECIFIED
FRACTIONS: ±1/64
DECIMALS (.XX): ±.01
DECIMALS (.XXX): ±.005
DECIMALS (.XXXX): ±.0005
ANGLES: ±1°

FINISH: —

FSCM 83330

DRAWING NUMBER: C-18776

REV: A

TITLE: 1.9mm GULLWING LED

MATERIAL: —

Dialight
1501 ROUTE 34 SOUTH
FARMINGDALE, NJ 07727
(732) 919-3119
www.dialight.com

SHEET 1 OF 1

FAMILY TABLE: