THIS DRAWING IS UNPUBLISHED. RELEASED FOR PUBLICATION -,- .
© COPYRIGHT - By - ALL RIGHTS RESERVED.

LOC	DIST
CM	00

REVISIONS

P	LTR	DESCRIPTION	DATE	DWN	APVD
	AC2	REVISED PER ECO-11-004587	11MAR11	RK	HMR

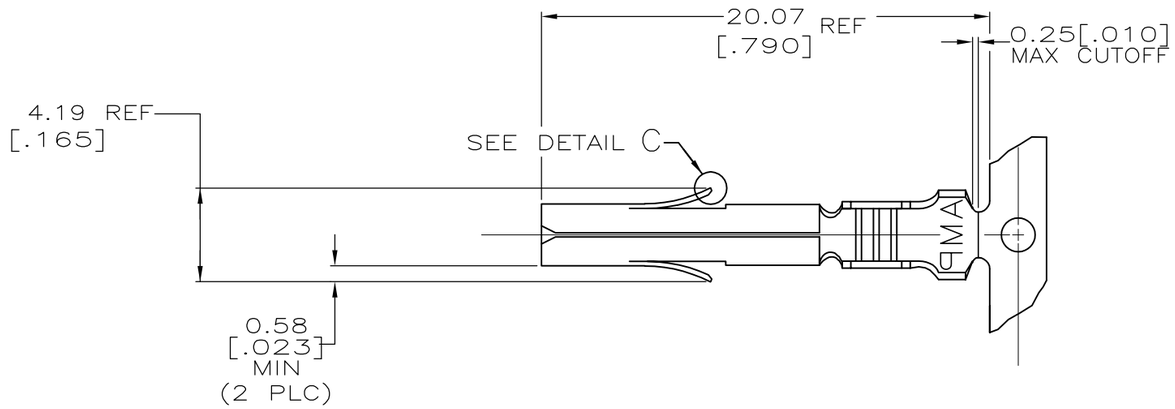

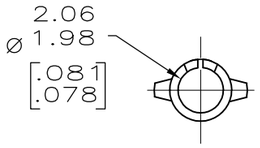

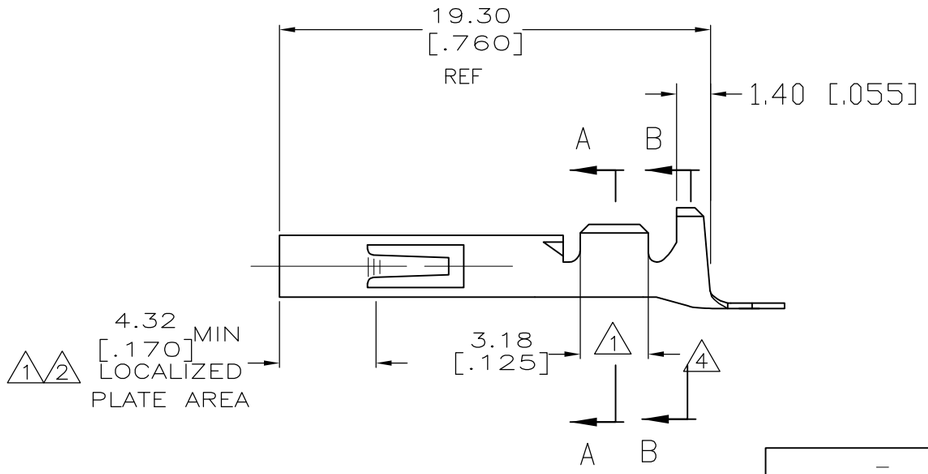

1. 0.00076[.000030] THK GOLD OVER NICKEL ON INSIDE OF RECEPTACLE AND WIRE BARREL; REMAINDER OF CONTACT IS NICKEL PLATED.
2. 0.00076[.000030] THK GOLD ON INSIDE OF RECEPTACLE; REMAINDER OF CONTACT IS NICKEL PLATED.
3. DIMENSIONS IN BRACKETS ARE IN INCHES.
4. PRELIMINARY, NOT FOR PRODUCTION.
5. OBSOLETE PARTS: OBSOLETE CIS STREAMLINING PER D.RENAUD/D.SINISI

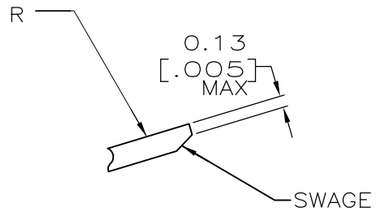

DETAIL C
SCALE 20:1

	LOOSE PIECE (REF)	APPLICATOR TYPE	FINISH	MATERIAL	PART NUMBER
	–	–	TIN	0.30 [.012] BE CU	1-350536-0
5 OBSOLETE	–	STANDARD	TIN	0.30 [.012] PH BZ	~~350536-9~~
	350550-7	MINI	GOLD 2	0.30 [.012] BRASS	350536-7
	350550-6	MINI	GOLD 2	0.30 [.012] PH BZ	350536-6
	350550-3	MINI	TIN	0.30 [.012] PH BZ	350536-3
	350550-2	MINI	GOLD 1	0.30 [.012] BRASS	350536-2
	350550-1	MINI	TIN	0.30 [.012] BRASS	350536-1

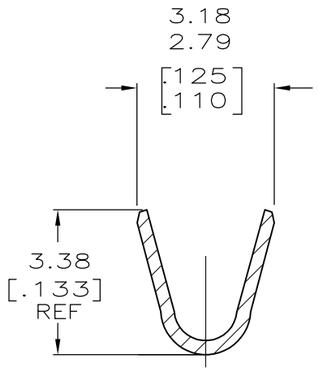

SECTION A-A
SCALE 10:1

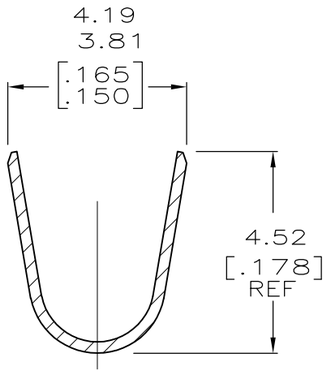

SECTION B-B
SCALE 10:1

THIS DRAWING IS A CONTROLLED DOCUMENT.

DIMENSIONS: mm [INCHES]

TOLERANCES UNLESS OTHERWISE SPECIFIED:

0 PLC	± –
1 PLC	± –
2 PLC	± 0.13 [.005]
3 PLC	± –
4 PLC	± –
ANGLES	± –

MATERIAL –

FINISH –

DWN K. WHITAKER 07NOV2003
CHK S. RIDGILL 07-NOV-03
APVD S. RIDGILL 07-NOV-03
PRODUCT SPEC –
APPLICATION SPEC –
WEIGHT –

TE Connectivity

NAME
SOCKET,
UNIVERSAL MATE-N-LOK™
–

SIZE	CAGE CODE	DRAWING NO	RESTRICTED TO
A3	00779	C-350536	–

CUSTOMER DRAWING | SCALE 1:5 | SHEET 1 OF 1 | REV AC2